SONY

4-485-053-**14**(1)

# Solid-State Memory Camcorder

## *PMW-300K1*
## *PMW-300K2*

## Operating Instructions

Before operating the unit, please read this manual thoroughly and retain it for future reference.

XDCAM SxS HDMI MPEG HD422 Exmor XAVC

© 2013 Sony Corporation

# Table of Contents

## Overview

**Features** ..... **7**

**Part Identification** ..... **9**

Camcorder ..... 9
Zoom Lens (Supplied) ..... 13
IR Remote Commander (Supplied) ..... 15

**On-Screen Indications** ..... **16**

Direct Menu Operation ..... 17

## Preparations

**Power Supply** ..... **18**

Using a Battery Pack ..... 18
Using AC Power (DC IN Power) ..... 19
Turning the Power On/Off ..... 19

**Setting the Clock** ..... **20**

**Adjusting the Viewfinder** ..... **20**

**Adjusting the Lens** ..... **25**

Replacing the Lens ..... 25
Adjusting the Flange Focal Length ..... 27
Retrieving the Lens File ..... 28

**Adjusting the Grip (PMW-300K1 only)** ..... **29**

**Using the IR Remote Commander** ..... **29**

**Using SxS Memory Cards** ..... **30**

About SxS Memory Cards ..... 30
Inserting/Removing an SxS Memory Card ..... 31
Switching Between SxS Memory Cards ..... 31
Formatting an SxS Memory Card ..... 31
Checking the Remaining Time Available for Recording ..... 32
Restoring an SxS Memory Card ..... 32

**Using Other Media** ..... **33**

XQD Memory Cards ..... 33
SDHC Cards ..... 33
USB Flash Drives ..... 34

**Using Wi-Fi Connection** ..... **35**

Using the Web Menu ..... 35

Using the Wi-Fi Remote Commander ..... 36

## Recording

**Basic Operation Procedure ..... 38**

**Changing Basic Settings ..... 40**

Video Formats ..... 40
ND Filter ..... 41
White Balance ..... 41
Markers/Zebra Patterns ..... 42
Gain ..... 42
Electronic Shutter ..... 43
Iris ..... 43
Zoom ..... 44
Focus ..... 44
Eliminating Picture Blurring (Steady Shot) (PMW-300K1 only) ..... 45
Flickers ..... 45
Time Data ..... 46

**Recording Audio Signals ..... 46**

Using the Built-in Stereo Microphones ..... 46
Using External Inputs ..... 46
Using an External Microphone ..... 46
Adjusting the Audio Recording Levels ..... 47
Monitoring the Audio ..... 47

**Useful Functions ..... 48**

Color Bars/Reference Tone ..... 48
Shot Marks ..... 48
OK/NG/KP Flags (for UDF/exFAT Only) ..... 48
OK Mark (for FAT HD Mode Only) ..... 48
Rec Review ..... 49
Assignable Buttons ..... 49
Interval Recording ..... 49
Frame Recording ..... 50
Clip Continuous Recording (UDF/exFAT Only) ..... 51
Picture Cache Recording: Retroactively Record ..... 51
Slow & Quick Motion ..... 52
Freeze Mix: Image Alignment ..... 53
Picture Profiles ..... 54
Deleting Clips ..... 61
Storing/Retrieving the Setting Data ..... 61
Planning Metadata ..... 62

## Playback

**Thumbnail Screens ..... 65**
Configuration of the Thumbnail Screen ..... 65
Changing the Type of Thumbnail Screen ..... 66
**Playing Clips ..... 67**
Playing the Selected and Subsequent Clips in Sequence ..... 67
Monitoring Audio ..... 68
Cueing Up ..... 68
Adding Shot Marks During Playback (UDF/exFAT/FAT HD Mode) ..... 68
**Clip Operations ..... 68**
Clip Operation Menus ..... 68
Basic Operations of the Clip Operation Menus ..... 69
Displaying the Detailed Information of a Clip ..... 70
Adding/Deleting a Flag (UDF/exFAT Only) ..... 71
Adding/Deleting the OK Mark (FAT HD Mode Only) ..... 71
Copying Clips ..... 71
Deleting Clips ..... 72
Displaying the EXPAND CLIP Screen ..... 72
Displaying the SHOT MARK Screen (UDF/exFAT/FAT HD Mode) ..... 73
Adding/Deleting Shot Marks (UDF/exFAT/FAT HD Mode) ..... 74
Changing the Index Frame (UDF/exFAT/FAT HD Mode) ..... 74
Dividing a Clip (FAT HD Mode Only) ..... 74

## Status Displays

**Showing the Status Screens ..... 75**
Camera Status Screen ..... 75
Audio Status Screen ..... 76
Video Status Screen ..... 76
Button/Remote Status Screen ..... 76
Battery/Media Status Screen ..... 77

## Menu Configuration and Detailed Settings

**Overview of the Setup Menus ..... 78**
Setup Menu Layers ..... 78
**Basic Menu Operations ..... 79**
**Setup Menu List ..... 81**
CAMERA SET Menu ..... 81
AUDIO SET Menu ..... 88
VIDEO SET Menu ..... 90
VF SET Menu ..... 92
TC/UB SET Menu ..... 96
LENS File Menu ..... 98
OTHERS Menu ..... 100

## Connecting External Devices

**Connecting External Monitors and Recording Devices ..... 109**
**Operating Clips With a Computer ..... 110**
**Connecting via i.LINK (FAT only) ..... 112**
Recording the Camcorder Picture on an External Device ..... 112
Nonlinear Editing ..... 113
Recording External Input Signals ..... 113
**External Synchronization ..... 114**
**Operating via the REMOTE Connector ..... 116**
Operating the Menus of the Camcorder ..... 117
Functions Operable via the REMOTE Connector ..... 118

## Appendices

**Important Notes on Operation ..... 121**

**Formats and Limitations of Outputs ..... 123**

Video Formats and Output Signals ..... 123
Limitations of Inputs/Outputs ..... 128

**Saving and Loading Lens Files ..... 130**

Setting Lens File Data ..... 130

**Backup Battery Replacement ..... 131**

**Troubleshooting ..... 133**

Power ..... 133
Recording/Playback ..... 133
External Devices ..... 134

**Error/Warning Indications ..... 135**

Error Indications ..... 135
Warning Indications ..... 135

**Licenses ..... 138**

MPEG-2 Video Patent Portfolio License ..... 138
Bitmap Fonts ..... 138
About OpenSSL ..... 138
About JQuery,Sizzle.js ..... 140

**Specifications ..... 141**

General ..... 141
Supplied Lens ..... 143
Camera Section ..... 143
Inputs/Outputs ..... 144
Monitoring ..... 144
Built-in Microphone ..... 145
Media ..... 145
Supplied Accessories ..... 145
Optional Accessories ..... 145

**Index ..... 148**

# Features

The PMW-300 is a highly compact and high-performance XDCAM[1)] camcorder that uses SxS[1)] memory cards as recording media. The imaging device used in the PMW-300 camcorder is a 1/2-inch type triple-chip "Exmor"[1)] CMOS sensor, and the PMW-300 has an effective pixel count of 1920 × 1080. Either the UDF, exFAT, or FAT file system can be used with recording media.

## Multiple-format support

Both Interlace at 1080/59.94i (or 1080/50i) and Progressive at 1080/29.97P, 1080/23.98P, 720/59.94P, 720/29.97P, and 720/23.98P (or 1080/25P, 720/50P, and 720/25P) are supported, providing various HD recording formats for worldwide coverage.
NTSC/PAL SD formats are also possible, including SD signal recording and playback in DVCAM format, as well as down-conversion output of HD signals into SD signals.

## A new generation HD recording system

### HD recording using the "MPEG-2 Long GOP" or "XAVC Intra" codec and SD recording in DVCAM/MPEG IMX format

The PMW-300 records 1920 × 1080, 1440 × 1080 (MPEG-2 Long GOP mode only), and 1280 × 720 HD images using "MPEG-2 Long GOP" or "XAVC Intra" codec compression. When recording with UDF, settings of 50 Mbps (in HD422 mode) or 35 Mbps (in HQ mode) are supported. With FAT, settings of 35 Mbps (in HQ mode) or 25 Mbps (in SP mode) are supported. With exFAT, the bit rate is set to up to 112 Mbps (XAVC-I mode).
When using a 128 GB SxS memory card, efficient compression methods allow for recording approximately 120 minutes of HD images at 112 Mbps (in XAVC-I mode), approximately 240 minutes of HD images at 50 Mbps (in HD422 mode), and approximately 360 minutes of HD images at 35 Mbps (in UDF/HQ mode).
Furthermore, the PMW-300 supports recording and playback in DVCAM 25 Mbps format, recording and playback in MPEG IMX 50 Mbps format, and playback in MPEG IMX 40 Mbps/30 Mbps format.

### High-quality uncompressed audio recording

When in UDF HD422 or exFAT/XAVC-I mode, this camcorder can record 4-channel audio in 24-bit, 48 kHz linear PCM format. Recording of 4-channel audio in 16-bit, 48 kHz linear PCM format for FAT HD Mode is possible.

### Support for a file-based workflow

File-based recording in MXF and MP4 formats allows material to be handled with great flexibility in computer work environments, enabling easy copying, transferring, sharing, and archiving.

### Instant-access thumbnail display with "Expand" function

Each time a recording is started and stopped, the video and audio signals are recorded as one clip. Furthermore, thumbnails are automatically generated for each clip as a visual reference, allowing the operator to cue-up to a desired scene simply by guiding the cursor to a thumbnail. For further convenience, the 'Expand' function allows one selected clip in the Thumbnail display to be divided into 12 equal time intervals, each with its own thumbnail identifier. This is useful if you wish to quickly search for a particular scene within a lengthy clip.

## Creative recording modes and settings

### Lens mount

The PMW-300 employs a lens mount (Sony 1/2-inch type EX mount) of superior optical characteristics in a compact size, which permits an optionally available lens specifically designed for the PMW-300 to be mounted. (You can also use the VCL-614B2X.)
You can use a conventional Sony 1/2-type bayonet mount lens by using the lens mount adapter (supplied with the PMW-300K2).

### High-performance zoom lens (supplied)

The PMW-300 is equipped with a zoom lens specifically designed for the camcorder, to offer optimum shooting performance. Independent

rings for zoom, focus, and iris adjustment give the user a high level of smooth operational control. The lens has versatile functions for easy and precise focus adjustments.

- One-push Auto Focus
- MF Assist
- Optical Image Stabilizer (Steady Shot) (PMW-300K1 only)
- Expanded Focus (for PMW-300K2, this function can be used by assigning it to an assignable button)
- Peaking

### Slow & Quick Motion function

By using different settings for the recording framerate and playback framerate, you can perform high-quality slow-motion and quick-motion recording.

### Slow Shutter function

This camcorder enables the capturing of clear, low-noise images in low-light environments, with long exposure of up to 64 frames.

### Selectable gamma curves

Gamma curves can be selected based on the scenes being recorded.

### Interval Recording function

You can perform intermittent recording at pre-determined intervals. This is convenient for shortening the time it takes to track variations over long periods, such as changes in the weather or plant growth.

### Frame Recording function

Frame Recording is a unique feature of the PMW-300 camcorder that is especially useful for clay-animation shooting. With this function, images for pre-determined frame are recorded each time the record button is pressed.

### Shutter-angle settings

In addition to the electric shutter speed controls, the PMW-300 also has a “shutter angle” control, which is familiar to cinematographers.

### Picture Profile feature

The Picture Profile feature allows the camera operator to easily call up customized picture-tonal settings to suit particular shooting conditions.
Up to 6 groups of settings can be set.

### Picture Cache Recording function

The unit can utilize its internal memory to store the image being captured, allowing recording to commence up to 15 seconds in advance of when the REC START (recording start) button was pressed.

## A variety of functions and designs for high operability

- Depth-of-field indicator
- Brightness-level display
- Histogram indicator
- Color viewfinder incorporated with a 3.5-inch color LCD inside: Flipping up the eyepiece, you can also operate the camcorder while directly viewing the LCD.
- Eight assignable buttons
- Zoom and recording start/stop operations enabled both on the handle and the grip
- Long operating time with a battery pack
- Wide array of interfaces, including USB, i.LINK[1)], and HDMI[2)]
- ATW (Auto Tracing White Balance)
- Selectable gain
- High-speed picture search: ×4, ×15, ×24
- Freeze Mix function
- IR Remote Commander[1)] supplied
- Planning metadata function
- Wi-Fi remote control function

*1)* Sony, XDCAM, SxS, i.LINK, Exmor, XAVC, and Remote Commander are trademarks of Sony Corporation.

*2)* The terms HDMI and HDMI High-Definition Multimedia Interface, and the HDMI Logo are trademarks or registered trademarks of HDMI Licensing LLC in the United States and other countries.

All other trademarks are the property of their respective owners.

# Part Identification

*For functions and usage, see the pages in parentheses.*

## Camcorder

**The following illustration is the PMW-300K1.**

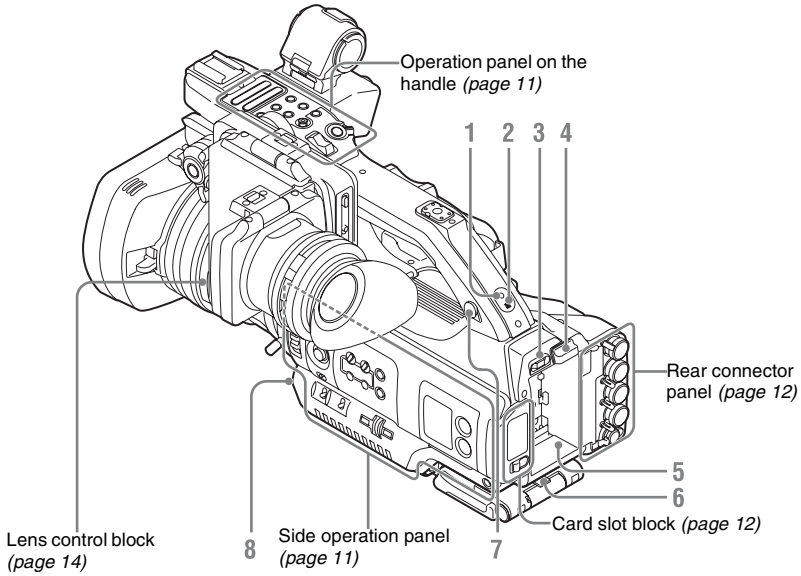


1. **REC/TALLY lamp**
2. **Rear IR remote control receptor**
3. **Power switch *(page 19)***
4. **BATT RELEASE button *(page 18)***
5. **Battery pack receptacle *(page 18)***
6. **Breast pad**
   It can be pulled out as follows:

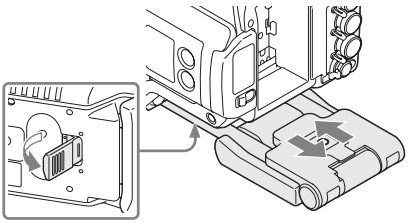

Raise the lever at the bottom to unlock. Hold the lever raised when pulling out or pushing in the pad.

**Note**

After pulling out the breast pad, lock it by tilting the lever.

The pad can be used on your shoulder by opening it toward you, as follows:

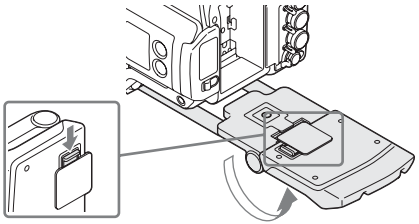

Press the lever of the pad to unlock. Hold the lever pressed when opening the pad.
To return the pad to the original position, press the lever while lifting the pad slightly.

**Note**

Do not place weight in excess of 1 kg on the pad.

7. **Headphone connector (stereo mini jack)** ***(page 47)***
8. **WHT BAL (automatic white balance adjustment) button** ***(page 42)***

**The following illustration is the PMW-300K1.**

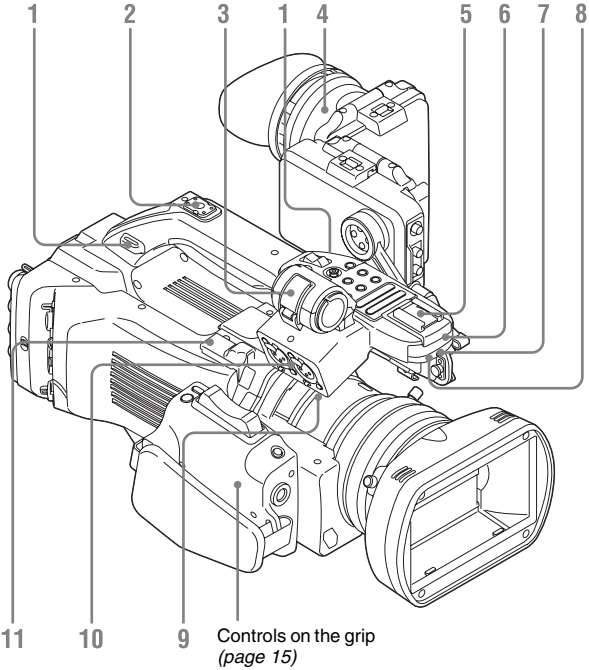


1. **Hooks for the shoulder strap**
   Attach the supplied shoulder strap as shown below.

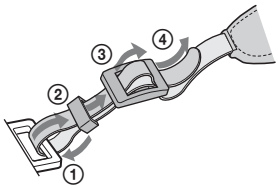


2. **Rear accessory shoe**
3. **External microphone holder** ***(page 46)***
4. **Viewfinder** ***(page 20)***
5. **Front accessory shoe**
6. **Built-in microphone** ***(page 46)***
7. **REC/TALLY lamp**
8. **Front IR remote control receptor**
9. **Cable clamp** ***(page 46)***
10. **AUDIO IN CH-1/CH-2 connectors (XLR type) and input selection (LINE/MIC/MIC+48V) switches** ***(page 46)***
11. **VF connector (26-pin)** ***(page 20)***

## Operation panel on the handle

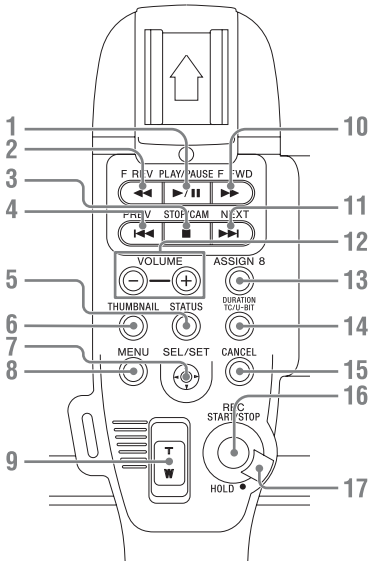


1. **PLAY/PAUSE button** ***(page 67)***
2. **F REV (fast reverse) button** ***(page 68)***
3. **STOP/CAM button** ***(page 65)***
4. **PREV (previous) button** ***(page 68)***
5. **STATUS (status display on/off) button** ***(page 75)***
6. **THUMBNAIL button** ***(page 65)***
7. **Joystick, SEL/SET (select/set) button** ***(page 79)***
8. **MENU (menu display on/off) button** ***(page 79)***
9. **On-handle ZOOM button** ***(page 44)***
10. **F FWD (fast forward) button** ***(page 68)***
11. **NEXT (clip directional jump) button** ***(page 68)***
12. **VOLUME (monitor volume) buttons** ***(page 47)***
13. **ASSIGN 8 (assignable 8) button** ***(page 49)***
14. **DURATION/TC/U-BIT (time data selection) button** ***(page 46)***
15. **CANCEL button**
16. **REC START/STOP button** ***(page 39)***
17. **REC HOLD lever** ***(page 39)***

## Side operation panel

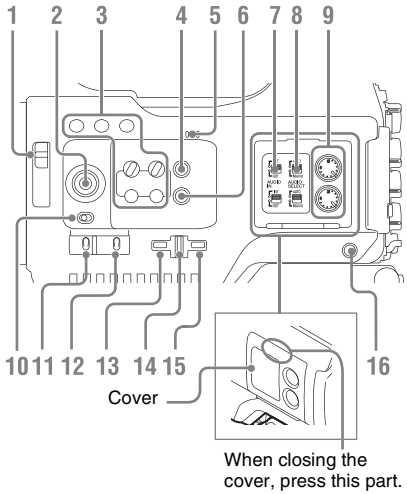


1. **ND FILTER select switch** ***(page 41)***
2. **S&Q (slow & quick) Motion dial** ***(page 52)***
3. **ASSIGN (assignable) 1/2/3/4/5/6/7 buttons** ***(page 49)***
   "Lens Info" is set to ASSIGN 1, "BRT Disp" is set to ASSIGN 2, "Histogram" is set to ASSIGN 3, and "Color Bars" is set to ASSIGN 4 by default.
4. **FULL AUTO button and indicator** ***(page 38)***
5. **Built-in speaker** ***(page 68)***
6. **PICTURE PROFILE button** ***(page 54)***
7. **AUDIO IN (audio input selection) switches** ***(page 46)***
8. **AUDIO SELECT (audio level control mode selection) switches** ***(page 47)***
9. **AUDIO LEVEL CH-1/CH-2 knobs** ***(page 47)***
10. **SHUTTER switch** ***(page 43)***
11. **GAIN switch** ***(page 42)***
12. **WHITE BAL (white balance memory) switch** ***(page 41)***
13. **MENU (menu display on/off) button** ***(page 79)***
14. **SEL/SET dial (jog dial)** ***(page 79)***
    It functions accordingly when you turn it up or down, or you push it horizontally.

It is called the "jog dial" in the subsequent operating instructions.

15. **CANCEL button**
16. **SLOT SELECT (SxS memory card select) button** ***(page 31)***

## Card slot block

The SxS memory card slots and EJECT buttons are located behind the cover.

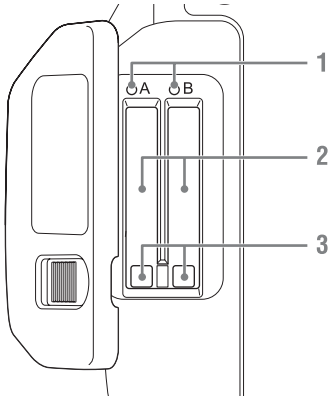


1. **ACCESS lamps** ***(page 31)***
2. **SxS memory card slots** ***(page 31)***
3. **EJECT (SxS memory card eject) buttons** ***(page 31)***

## Viewfinder control panel

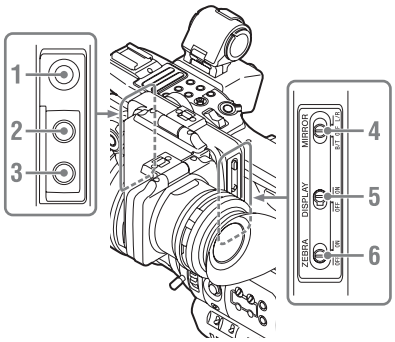


1. **PEAKING control** ***(page 45)***
2. **CONTRAST control** ***(page 20)***
3. **BRIGHT control** ***(page 20)***
4. **MIRROR switch** ***(page 23)***
5. **DISPLAY switch** ***(page 16)***
6. **ZEBRA switch** ***(page 42)***

## Rear connector panel

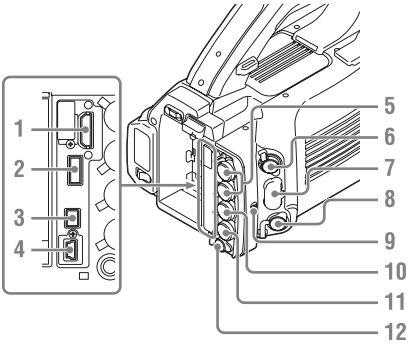


1. **HDMI OUT connector** ***(page 109)***
2. **USB connector (type A)** ***(page 34)***
3. **i.LINK (HDV/DV) connector (4-pin, S400 conforming to IEEE1394)** ***(page 109)***
4. **USB connector (Mini B)** ***(page 110)***
5. **SDI OUT connector (BNC type)** ***(page 109)***
6. **VIDEO OUT (composite video output) connector (BNC type)** ***(page 109)***
7. **AUDIO OUT CH-1/CH-2 connector (RCA pin jack)** ***(page 113)***
8. **REMOTE connector (8-pin)** ***(page 116)***
9. **TC IN/OUT (input/output change) switch** ***(page 116)***
   Set this to IN to select TC IN, and set this to OUT to select TC OUT.
10. **TC IN (timecode input)/TC OUT (timecode output) connector (BNC type)** ***(page 115)***
11. **GENLOCK IN connector (BNC type)** ***(page 114, 115)***
12. **DC IN connector** ***(page 19)***

## Bottom

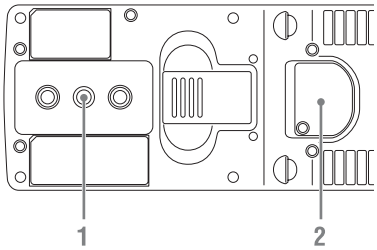


1. **Tripod receptacles**

**Note**

Check that the size of the hole matches the screw of the tripod. If they do not match, the camcorder cannot be attached to the tripod securely, and this may lead to the physical injury of the camera operator.

2. **Backup battery holder** ***(page 131)***
   The backup battery holder is exposed when the breast pad is pulled out.

# Zoom Lens (Supplied)

### PMW-300K1

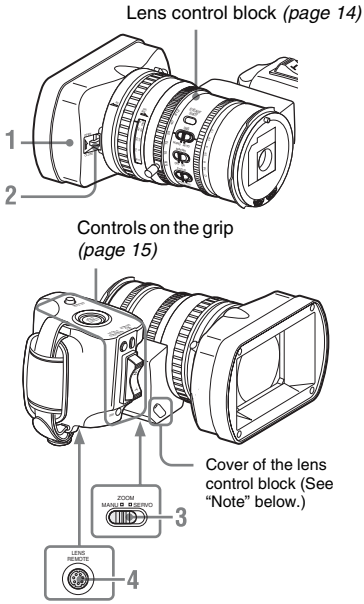


### PMW-300K2

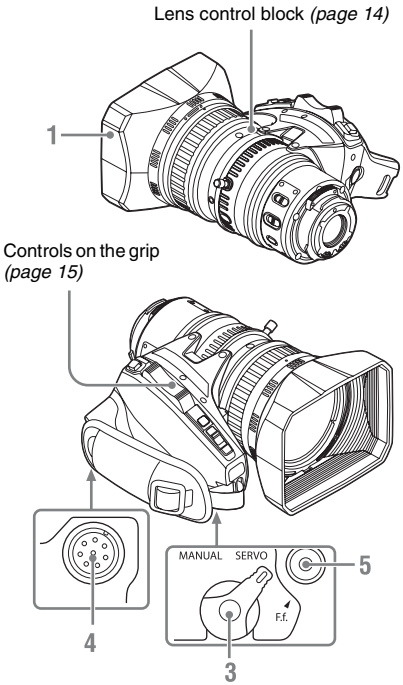


1. **Lens hood**
2. **Lens cap open/close lever** ***(page 38)*** **(PMW-300K1 only)**
3. **ZOOM switch** ***(page 44)***
4. **LENS REMOTE connector** ***(page 44)***
5. **F.f. button (PMW-300K2 only)**
   Press when adjusting the flange focal length (distance from the mounting flange to the film plane) *(page 27)*.

**Note**

The lens is properly adjusted at the factory. Do not touch the controls of the lens control block.

### PMW-300K1

**To remove the lens hood**

① Loosen the hood fixing screw, ② turn the hood in the direction of the arrow, ③ then pull it out.

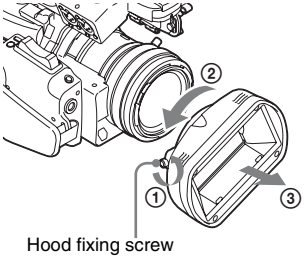


**To reattach the hood**

Align the marks on the hood with those on the camcorder, turn it in the opposite direction from that when you removed it, then tighten the fixing screw.

### PMW-300K2

**To remove the lens hood**

① Turn the lens to the direction of the arrow.
② Remove the lens.

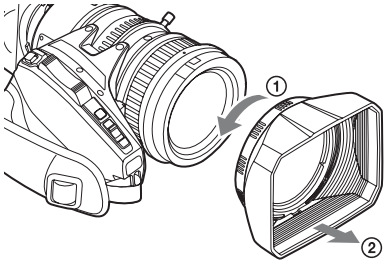


**To reattach the hood**

Align the marks on the hood (FREE ●) with those on the camcorder, turn it in the opposite direction of the arrow, then fix it.

## Lens control block

### PMW-300K1

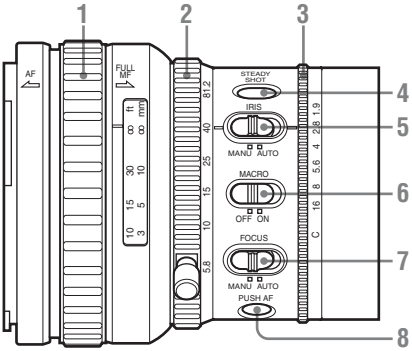


### PMW-300K2

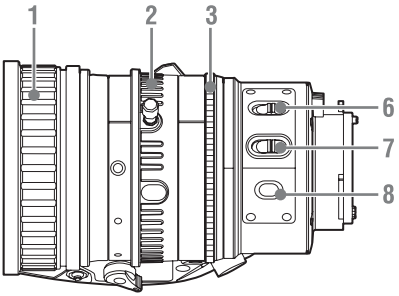


1. **Focus ring** ***(page 44)***
2. **Zoom ring** ***(page 27)***
3. **Iris ring** ***(page 44)***
4. **STEADY SHOT button** ***(page 45)*** **(PMW-300K1 only)**
5. **IRIS switch** ***(page 43)*** **(PMW-300K1 only)**
6. **MACRO switch** ***(page 45)***
7. **FOCUS switch** ***(page 45)***
8. **PUSH AF (momentary auto focus) button** ***(page 45)***

## Controls on the grip

**PMW-300K1**

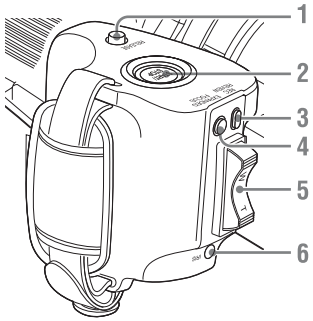


**PMW-300K2**

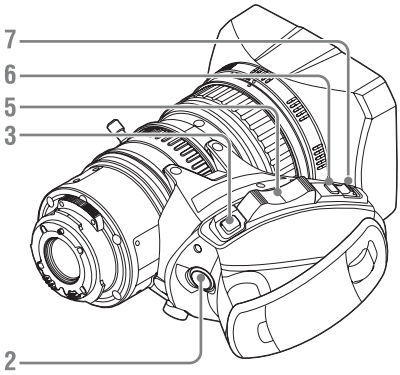


1. **RELEASE (grip release) button *(page 29)* (PMW-300K1 only)**
2. **START/STOP (recording start/stop) button *(page 38)* (PMW-300K1)**
   **VTR (recording start/stop) button *(page 38)* (PMW-300K2)**
3. **REC REVIEW button *(page 39)* (PMW-300K1)**
   **RET button *(page 39)* (PMW-300K2)**
4. **EXPANDED FOCUS button *(page 44)* (PMW-300K1 only)**
5. **Servo zoom lever *(page 44)***
6. **IRIS button *(page 44)* (PMW-300K1)**
   **IRIS PUSH AUTO button *(page 44)* (PMW-300K2)**
7. **IRIS (iris adjusting mode selection) switch *(page 43)* (PMW-300K2 only)**

## IR Remote Commander (Supplied)

The buttons without remarks can be used in the same manner as the corresponding buttons on the camcorder.

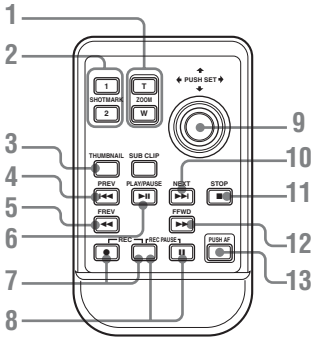


1. **ZOOM T/W (telephoto/wide-angle) buttons**
2. **SHOTMARK 1 and 2 buttons (*page 48*, *page 68*)**
3. **THUMBNAIL button**
4. **PREV (previous clip jump) button**
5. **F REV (fast reverse) button**
6. **PLAY/PAUSE button**
7. **REC (record) buttons**
   Press the ● button together with the unmarked button (safety button) to start recording.
8. **REC PAUSE buttons**
   Press the ❚❚ button together with the unmarked button (safety button) to pause recording.
9. **PUSH SET button (select/set)**
   It functions the same as the SEL/SET button on the camcorder.
10. **NEXT button**
11. **STOP button**
12. **F FWD (fast forward) button**
13. **PUSH AF button**

**Note**

The SUB CLIP button has no function.

# On-Screen Indications

While recording (or standing by to record), setting the DISPLAY switch of the viewfinder to ON displays the statuses and settings of this unit on the viewfinder screen.

**Remarks**

M: The indication of the items named with this suffix can be independently turned on/off with "Display On/Off" in the VF SET menu *(page 94)*.

A: The indication of items named with this suffix can be turned on/off using the assignable buttons to which the corresponding on/off functions have been assigned *(page 49)*.

D: The settings of the items named with this suffix can be changed using the Direct menu on the screen *(page 17)*.

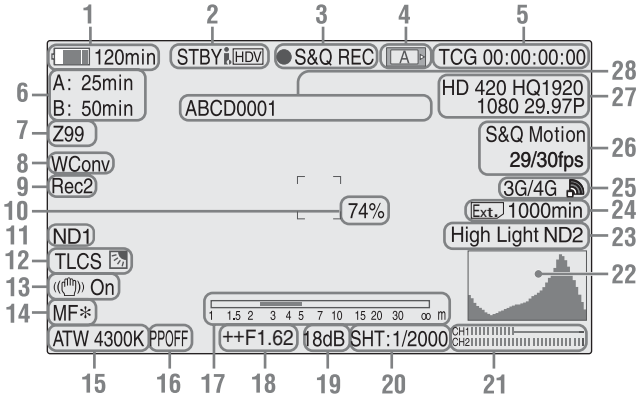


1. **Battery remaining/DC IN voltage indication** M ***(page 18)***

2. **i.LINK status indication** ***(page 112)***
   Only when an external device is connected to the i.LINK connector, the status of the device is displayed.

3. **Special recording/operation status indication**

| | |
|---|---|
| ●REC | Recording in progress<br>Cache Recording in progress |
| STBY | Standby for recording |
| CONT | Standby for recording<br>When using Clip Continuous Recording, indicates that a clip is being continued.<br>"CONT" flashing: When using Clip Continuous Recording, indicates that there is no continuing clip. |
| ●S&Q REC | Slow & Quick Motion recording in progress |
| S&Q STBY | Standby for Slow & Quick Motion recording |
| ●INT REC | Interval Recording in progress |
| INT STBY | Standby for Interval Recording |
| ●FRM REC | Frame Recording in progress |
| FRM STBY | Standby for Frame Recording |
| ●CACHE | Standby for Cache Recording |

4. **Media status indication**

| | |
|---|---|
| A | Memory card in slot A is active. |
| B | Memory card in slot B is active. |

5. **Time data indication** M ***(page 46)***

6. **Media remaining indication** M ***(page 32)***

7. **Zoom position indication** M ***(page 44)***

8. **Wide-conversion lens setting indicator** M ***(page 87)***

| | |
|---|---|
| WConv | When "Wide Conversion" of the CAMERA SET menu is set to "On" |
| EX | When "Wide Conversion" of the CAMERA SET menu is set to "Off," and the lens extender for a exchanged lens is set to on |
| 08 | When "Wide Conversion" of the CAMERA SET menu is set to "Off," and the lens shrinker for a exchanged lens is set to on |

Displayed when "Wide Conversion" of the CAMERA SET menu is set to "On."

9. **Synchronous recording display** M *(page 109)*
   Displayed when "SDI Rec Control" in the VIDEO SET menu is set to "HD SDI Remote I/F."
10. **Brightness level indication** M A
11. **ND FILTER position** M
    Displays the selected ND filter number *(page 41)*.
    ND1: 1/4 ND, ND2: 1/16 ND, ND3: 1/64ND
12. **TLCS mode indication** M D *(page 86)*

| | |
|---|---|
| | Backlight mode |
| STD | Standard mode |
| | Spotlight mode |

13. **Steady Shot indication** M D *(page 45)*
14. **Focus mode indication** M (D **only in MF mode)** *(page 44)*
15. **White balance mode and color temperature indications** M D *(page 41)*
16. **Picture profile indication** M D *(page 54)*
17. **Depth-of-Field bar indication** M A
18. **Iris position indication** M D *(page 43)*
19. **Gain indication** M D *(page 42)*
20. **Shutter mode/shutter speed indication** M D *(page 43)*
21. **Audio level meters** M
22. **Histogram indication** M A
23. **Video level cautioning indication** M **/Recommended ND filter number indication/Clip uploading status indication**
24. **Media remaining space indication for the CBK-WA100 Wireless Adapter (not supplied)**
25. **Wi-Fi status indication of the CBK-WA100 Wireless Adapter (not supplied)**
26. **Special recording mode indication** M (D **only in Slow & Quick Motion Standby)**

| | |
|---|---|
| Frame Rec | Frame Rec mode |
| Interval Rec | Interval Rec mode |
| S&Q Motion xx/xx fps | Slow & Quick Motion mode |

27. **Video Format indication** M *(page 40)*
28. **Clip name indication** M *(page 39)*

## Direct Menu Operation

The settings of the items named with a suffix D can be changed using the Direct menu on the screen.
Select "All," "Part," or "Off" for Direct Menu using "Direct Menu" *(page 102)* in the OTHERS menu.

**Note**

When the indicator of the FULL AUTO button is lit, the Direct Menu operation is disabled for the functions that are forcibly set to the automatic mode in Full Auto mode *(page 38)*.

1. **When the camcorder's status or settings are displayed on the screen, press the SEL/SET button *(page 11)* or the jog dial *(page 11)*.**
   If "Direct Menu" is set to "All" or "Part," the cursor is displayed on one of the items for which the Direct menu operation is permitted.
2. **Move the joystick *(page 11)* or rotate the jog dial to set the cursor to the item to be operated, then press the SEL/SET button or the jog dial.**
   The Direct menu of the selected items appears.
3. **Move the joystick or rotate the jog dial to select a setting, then press the SEL/SET button or the jog dial.**
   The menu disappears, and the new setting is displayed.

# Power Supply



You can use a battery pack or AC power via an AC adaptor.
For safety, use only the Sony battery packs and AC adaptor listed below:

**Lithium-ion Battery Pack**
BP-U30
BP-U60
BP-U60T
BP-U90

**Battery Charger/AC Adaptor**
BC-U1
BC-U2

The life expectancy of the AC adapter and the electrolytic capacitor is about 5 years under normal operating temperatures and normal usage (8 hours per day; 25 days per month). If usage exceeds the above normal usage frequency, the life expectancy may be reduced correspondingly.

The battery terminal of this unit (the connector for battery packs and AC adaptors) is a consumable part.
Power may not be supplied to the unit properly if the pins of the battery terminal are bent or deformed by shock or vibrations, or if they become corroded due to prolonged outdoor use.
Periodic inspections are recommended to keep the unit working properly and to prolong its usable lifetime.
Contact a Sony service or sales representative for more information about inspections.

**CAUTION**

Danger of explosion if battery is incorrectly replaced. Replace only with the same or equivalent type recommended by the manufacturer.
When you dispose of the battery, you must obey the law in the relative area or country.

**WARNING**

Batteries shall not be exposed to excessive heat such as sunshine, fire or the like.

## Using a Battery Pack

Fully insert the battery pack into the battery pack receptacle *(page 9)*, then slide it down to lock it. To remove the battery pack, press and hold the BATT RELEASE button *(page 9)*, slide the battery pack upward to unlock it, then pull it out.

**Notes**

- Before use, charge the battery pack with the supplied BC-U1 or BC-U2 Battery Charger.
- A warm battery pack immediately after use may not be able to be fully recharged.
- The high-capacity BP-U90 Battery Pack is large, and protrudes from the camcorder when attached.

### Checking battery charge remaining

When recording or playback is in progress on the battery pack, an icon to show the current battery charge level and usage time remaining are displayed on the viewfinder screen *(page 16)*.

| Icon | Remaining |
|---|---|
| | 100% to 91% |
| | 90% to 71% |
| | 70% to 51% |
| | 50% to 31% |
| | 30% to 11% |
| | 10% to 0% |

The camcorder indicates the remaining usage time in minutes by calculating the available time with the battery pack if operation is continued at the current rate of power consumption.

### If the battery charge remaining becomes low

If the battery charge remaining decreases to a certain level during operation (Low BATT status), a low-battery message, flashing of the tally lamps, and a beep sound will warn you.
If the remaining further decreases to a level at which operation cannot be continued (BATT Empty status), a battery-empty message appears. Replace the battery pack with one that is fully charged.

**To change the message levels**

The Low BATT level is set to 10% of full charge, and the BATT Empty level is set to 3% of full charge at the factory. These settings can be changed with "Battery Alarm" *(page 102)* in the OTHERS menu.

## Using AC Power (DC IN Power)

**Connection example: when connecting BC-U1**

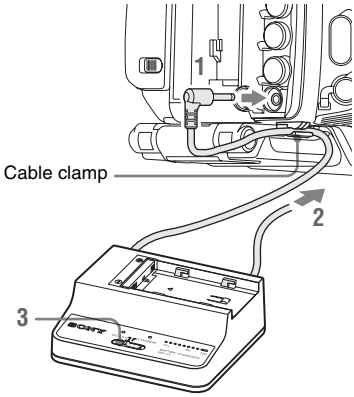


**1 Connect the DC power output cable of the BC-U1 to the DC IN connector of the camcorder.**

**2 Connect the power cord of the BC-U1 to an AC power source.**

**3 Set the mode switch of the BC-U1 to the DC OUT position.**

## Turning the Power On/Off

To turn the power on, set the power switch *(page 9)* to the ON position (the I position). The power indicator lights when the camcorder is turned on. To turn the power off, set the power switch to the OFF position (the ⏻ position).

**Notes**

- This camcorder uses a little standby power even when the power switch is set to OFF. Remove the battery pack if the camcorder will not be used for a prolonged period.
- When removing the battery pack or the DC IN power, be sure to first set the power switch to the OFF position. Removing the battery pack or the DC IN power while the camcorder is ON may cause damage to the camcorder or the SxS memory card.

# Setting the Clock

When you turn the camcorder on for the first time after purchasing or replacing the backup battery *(page 131)*, the Initial Setting display appears on the viewfinder screen.
Set the date and time of the built-in clock, using this display.

**Time Zone**
The value shows the time difference from UTC (Coordinated Universal Time).
Change the setting if needed.

## Setting the time and date

Move the joystick *(page 11)* or turn the jog dial *(page 11)* to move the cursor, then press the SEL/SET button or the jog dial to set each menu item. When you press the SEL/SET button or the jog dial when the cursor is on "Finish," the Initial Setting display disappears and the clock setting is completed.

After the Initial Setting display disappears, "Time Zone" *(page 100)* and "Clock Set" *(page 100)* in the OTHERS menu can be used to set "Time Zone" and "Date/Time."

**Notes**

- If the clock setting is cleared because of exhaustion of the backup battery while no operation power was being supplied (no battery pack and no DC IN connection), the Initial Setting display will be displayed when you turn the camcorder on at the next opportunity.
- While the Initial Setting display is shown, no other operation except turning the power off is permitted until you finish the setting for this display.

# Adjusting the Viewfinder

You can adjust the angle and the display conditions of the viewfinder for best viewing in various shooting situations.
These adjustments of the viewfinder have no effect on pictures being recorded.

## Attaching the supplied viewfinder

**Note**

When attaching the viewfinder, make notes of the following points.

- Be sure to turn off the camcorder before coupling the viewfinder connector to the camcorder's VF connector (26-pin). If you make this connection when the camcorder is turned on, the viewfinder may not function properly.
- Couple the viewfinder connector firmly to the camcorder's VF connector (26-pin). If the coupling is loose, noise may appear on the video.

**1 ① Loosen the fixing lever, ② while pulling the slide stopper, ③ attach the viewfinder to the viewfinder fitting shoe, then ④ tighten the fixing lever.**

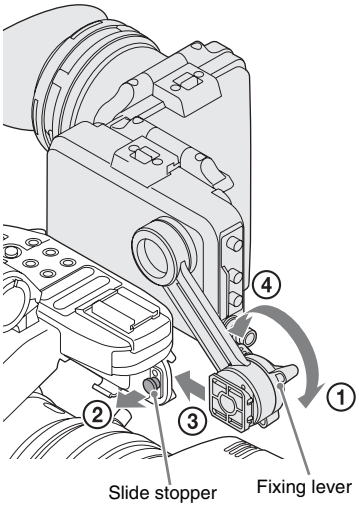

**2** **① Loosen the screw, ② slide the cover of the VF connector, then ③ remove the cover.**

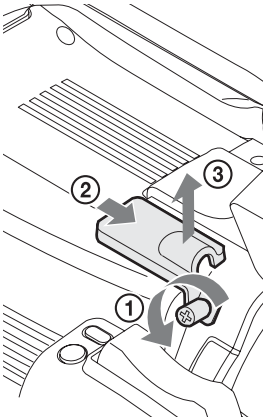


**3** **Couple the viewfinder connector to the VF connector (26-pin).**

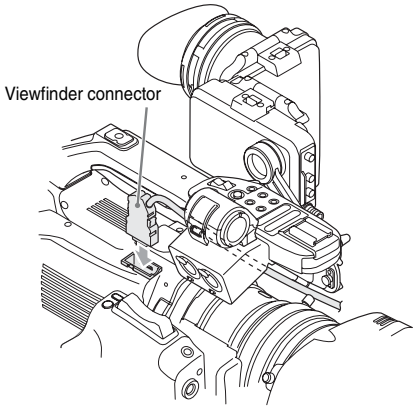


**4** **Reattach the cover of the VF connector.**

Push the tabs into the slots and slide the cover over.

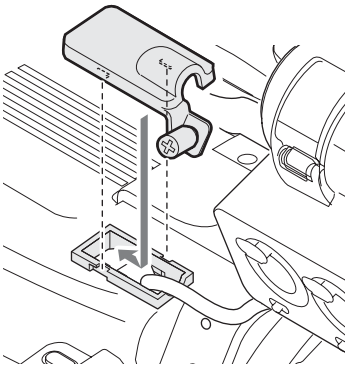

**Note**

Make sure that the cover of the VF connector is attached. If the cover is not attached, the coupling is loose and noise may appear on the video.

**5** **Route the cable as illustrated, using the clamps.**

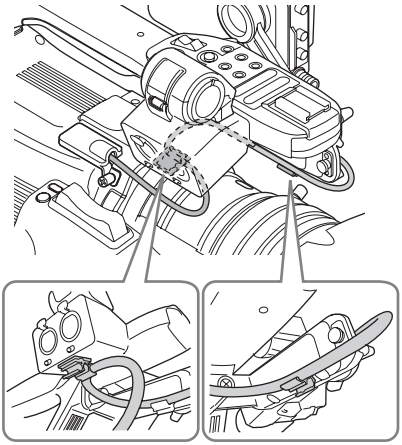

## Adjusting the focus in the viewfinder

The eyepiece focusing (diopter compensation) ring enables adjustment to match the eyesight of operator so that the operator can view the image clearly in the eyepiece.

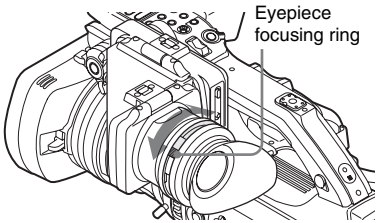


You can also attach a commercially available 52-mm aperture diopter compensation lens.

## Adjusting the contrast and brightness

Use the control knobs on the back panel of the viewfinder.

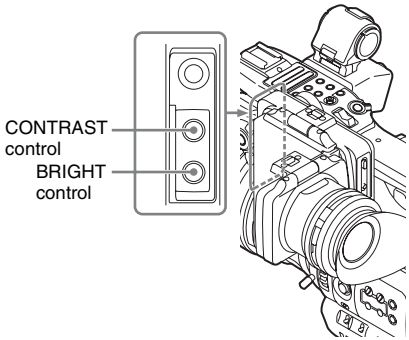


**CONTRAST:** For adjusting the contrast
**BRIGHT:** For adjusting the brightness
When you view the knob from the front, clockwise rotation increases the level and counterclockwise rotation decreases it.

## Adjusting the color

These adjustments can be made using the VF SET menu.
Press the MENU button to set the camcorder to Menu mode. Select VF SET menu then "VF" from the menu, and adjust "Color."

*For details on menu operations, see "Basic Menu Operations" on page 79.*

## Switching between color and monochrome modes

For the viewfinder display, color or monochrome display can be selected.
Select "VF" from the VF SET menu then select "Mode."
Select "B&W" if checking the subject and focusing are easier on the monochrome display.
If you assign "VF Mode" to one of the assignable buttons *(see page 49)*, you can switch between color and monochrome by pressing the button.

## Adjusting the position (distance from your eye)

Loosening the fixing lever below the handle (rotating it toward the viewfinder) permits you to horizontally pull out the support bar and move the viewfinder forward or rearward with the support bar as the axis.

**1 Adjust the horizontal position.**

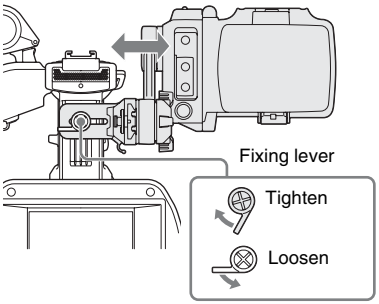


**2 Move the viewfinder forward or rearward for the best position.**

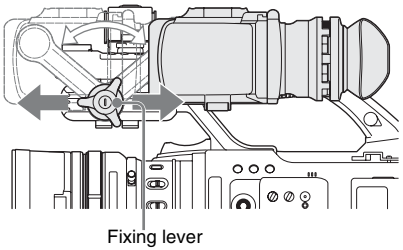


Tighten the fixing lever after the adjustments.

**Note**

When you move the viewfinder forward or rearward, the angle of the viewfinder varies simultaneously.
Adjust the angle for your best position after tightening the fixing lever.

## Adjusting the angle

You can adjust the angle of the viewfinder.

**Note**

If the fixing lever below the handle is loose, the position may vary when you adjust the angle. Be sure to tighten the lever in advance.

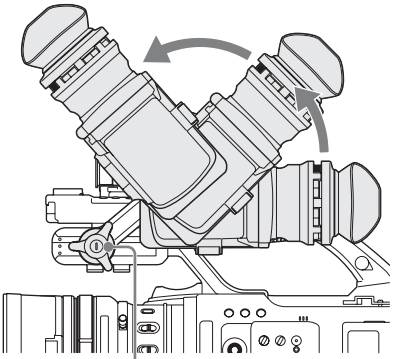


### To reverse the image

The viewfinder can be rotated as much as 180 degrees toward the direction facing the subject. To read the displayed menu and messages in this condition, set the MIRROR switch to ON so that the textual information is converted to the readable direction.

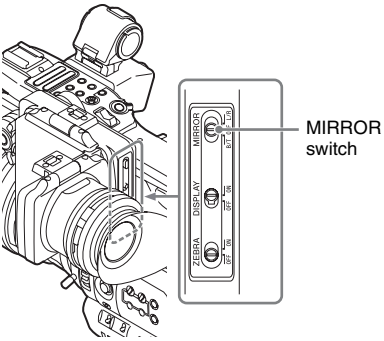


## Lifting up the viewfinder mirror and eyepiece

You can view the LCD screen inside the viewfinder or its mirrored image by lifting up the viewfinder mirror or the eyepiece.

### To lift up the viewfinder mirror

Push the clip on the bottom to release and flip up the viewfinder mirror. It locks at the 120-degree position.

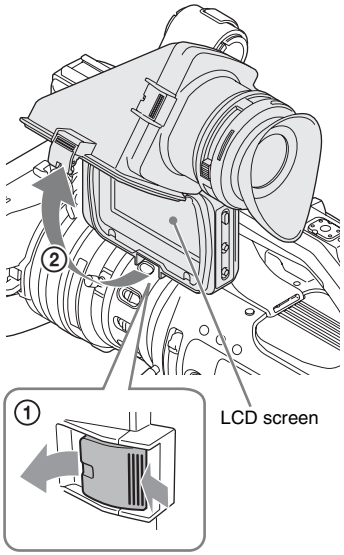

### To detach the viewfinder mirror

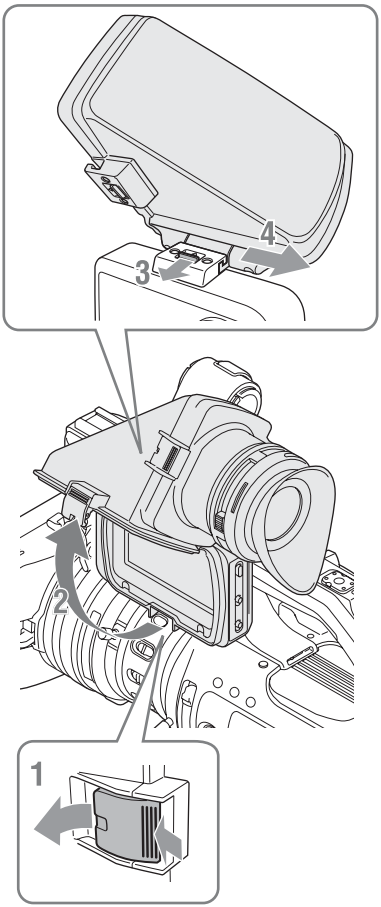


1 **Push the clip on the bottom to release.**

2 **Flip up the viewfinder mirror.**

3 **Slide the knob on the top to the opposite side of the viewfinder mirror.**

4 **Detach the viewfinder mirror by horizontally sliding it.**

## Opening/detaching the eyepiece

You can directly view the LCD screen inside the viewfinder by opening the eyepiece.

### To open

Push the clip on the bottom to release and flip up the eyepiece.
It locks at the 120-degree position.

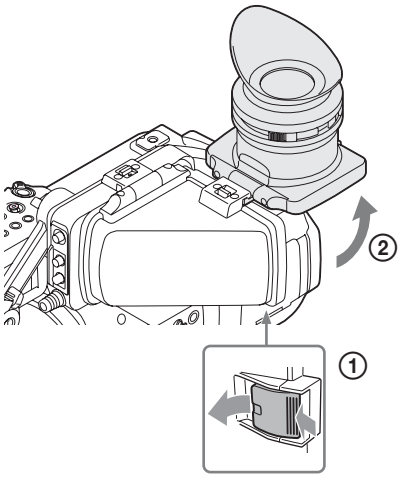

**To detach**

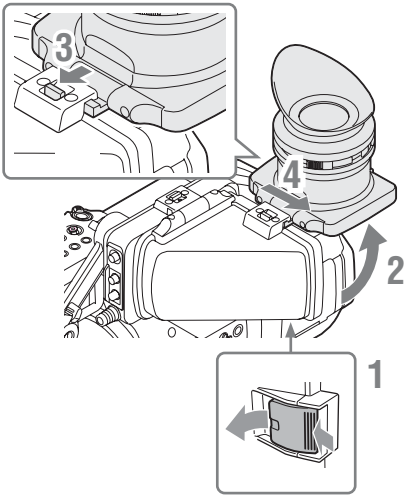


1 **Push the clip on the bottom to release.**

2 **Flip up the eyepiece.**

3 **Slide the knob on the top to the opposite side of the eyepiece.**

4 **Detach the eyepiece by horizontally sliding it.**

# Adjusting the Lens

The supplied lens is called "exclusive lens" in this manual.

**Caution**

Do not leave the camcorder with the lens facing the sun. Direct sunlight can enter through the lens, be focused in the camcorder, and cause fire.

## Replacing the Lens

In addition to the supplied zoom lens, a wide zoom lens (XS8x4AS-XB8) exclusively for the PMW-300 is available as an option.
By using the lens mount adapter (supplied with the PMW-300K2), a Sony 1/2-type bayonet mount lens can be mounted.
Note, however, that available functions, menu settings and performance may be restricted with non-exclusive lens.

*For non-exclusive but usable lenses, consult your Sony service representative.*

**Note**

Turn off the camcorder before replacing the lens.

### Removing the lens supplied with the PMW-300K1

To remove the supplied lens, proceed as follows:

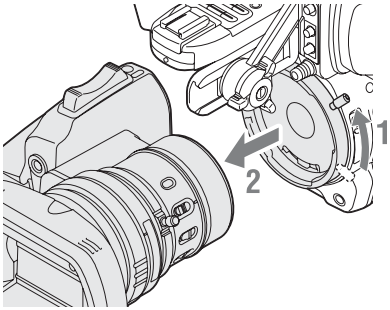


1 **While holding the lens, turn the lens mount lever upward until it stops.**

2 **Pull the lens forward to remove.**

**Notes**

- When another lens is not immediately attached, attach the supplied lens mount cap and secure it by turning the lens mount lever downward.
- When a non-exclusive lens is mounted for the first time, it may take about 20 seconds to start up the camcorder.

## Attaching the lens supplied with the PMW-300K1

To attach the supplied lens, proceed as follows: The optional Sony 1/2-inch type EX mount lens can also be mounted in the same manner.

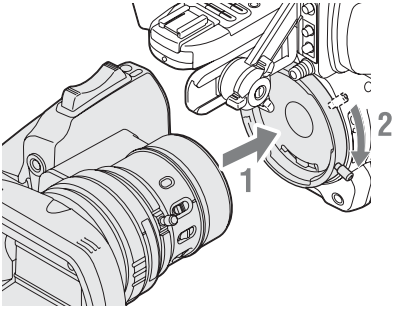


**1 Align the alignment pin of the lens with the recess at the top of the mount section of the camcorder and set the lens in place.**

**2 Turn the lens mount lever downward.**

## Attaching the lens supplied with the PMW-300K2

Use the lens mount adapter (supplied with the PMW-300K2).

**1 Attach the lens mount adapter to the camcorder.**

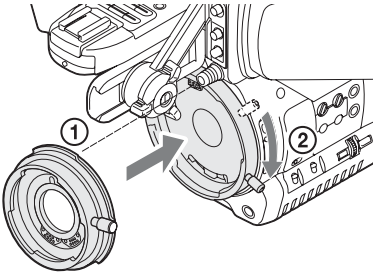


Lens mount adapter
(supplied with the PMW-300K2)

① Align the alignment pin of the lens mount adapter with the recess at the top of the mount section and set the adapter in place.

② Turn the lens mount lever of the camcorder downward. (Keep the lens mount lever of the lens mount adapter in the upper position.)

**2 Attach the lens.**

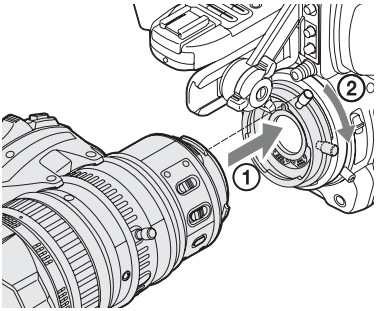


① Align the alignment pin of the lens with the recess of the lens mount adapter and set the lens in place.

② Turn the lens mount lever of the lens mount adapter downward.

To detach the lens, reverse the above procedure.

## Adjusting the Flange Focal Length

It is necessary to adjust the flange focal length (the distance from the lens flange to the plane of the image along the optical axis) if the focus does not match properly from telephoto to wide angle during zoom operations.
Repeated adjustment is not necessary as long as the same lens is used.

**PMW-300K1**

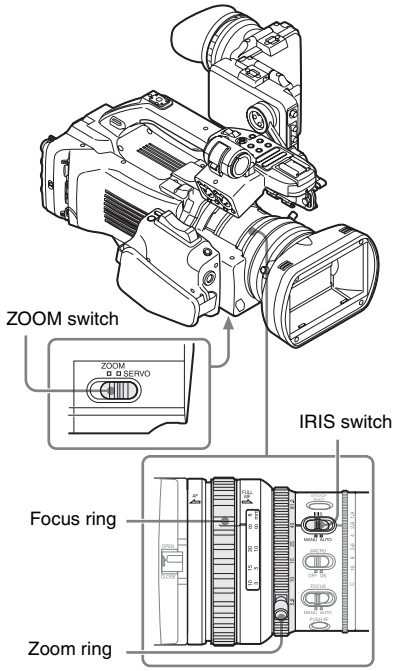


**PMW-300K2**

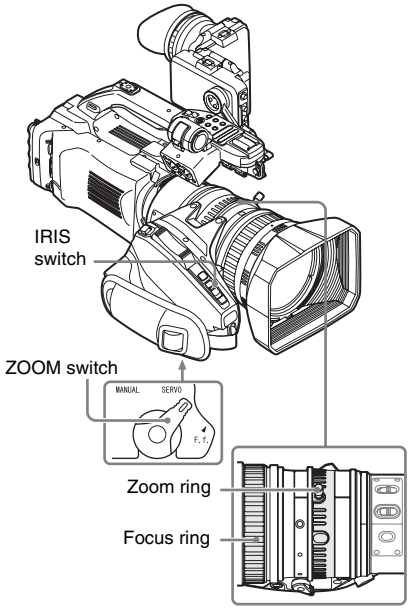


With the supplied or optional exclusive 1/2-inch EX Mount lens, the flange focal length can be adjusted automatically by the menu operation.

**Notes**

- If a subject of insufficient contrast is used, or if the camcorder or subject moves during the adjustment, adjustment cannot be made properly. Once the adjustment begins, do not touch the camcorder body or lens until it ends.
- When the Shutter is in SLS mode, be sure to set the SLS setting to OFF before starting the adjustment.
- Be careful that no light source, such as a lamp, the sun, or a bright window, is in field of view during flange focal length adjustment.

**1 Set the power switch to ON.**

**2 Set the IRIS switch to AUTO.**

**3 Place a high-contrast subject, such as a flange focal length adjustment chart, about 3 m (10 ft.) away from the**

**camcorder, and light it well enough to provide a sufficient video output level.**

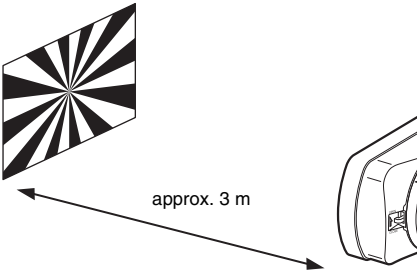


**4 Set the ZOOM switch to SERVO (Power Zoom mode).**

**5 Press the MENU button to set the camcorder to Menu mode, and select (the LENS File menu) then "Auto FB Adjust" from the menu.**

**6 Move the cursor to "Execute" then press the joystick or the jog dial.**

The adjustment begins.

*For the PMW-300K2, you can adjust the flange focal length by pressing and holding the F.f. button on the bottom of the grip.*

**During adjustment**

The in-progress message is displayed.

**When the adjustment finished properly**

The completion message is displayed.

**If the adjustment fails**

An error message appears.
Check the conditions of the subject and lighting then perform the adjustment again.

*For details on menu operations, see "Basic Menu Operations" on page 79.*

When a lens other than the exclusive lenses is used, adjust the flange focal length manually.

## Retrieving the Lens File

By your storing the data (such as compensation data) specific to the lenses in files, required adjustments and compensation can be performed merely by retrieving the appropriate file when changing lenses.

### When using an exclusive lens

The optimum compensation data for the exclusive lens is stored in the corresponding lens file at the factory to be automatically retrieved (with LENS File menu "Auto Recall: On").

### When using a non-exclusive lens

You can use the lens file in which you stored the compensation data for the lens, using the LENS File menu.

*For the storage method, see "Saving and Loading Lens Files" on page 130.*

**When you mount a serial lens**

The corresponding file is automatically retrieved.

**When you mount a non-serial lens**

Retrieve the corresponding lens file, using the LENS File menu.

**1 Press the MENU button to set the camcorder to Menu mode and select the LENS menu.**

**2 Select "Recall Mem," "Recall SxS," or "Recall USB" from "Operation" of the LENS File menu, then the corresponding lens file from the list.**

**3 When the confirmation message is displayed, select "Execute."**

*For details on menu operations, see "Basic Menu Operations" on page 79.*

# Adjusting the Grip (PMW-300K1 only)

The grip rotates approx. 120 degrees to support a variety of shooting styles.
Holding the RELEASE button pressed, slowly rotate the grip.

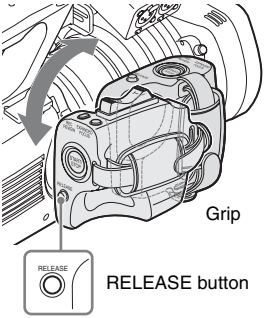


Click positions are provided at each 15 degrees. Release the RELEASE button at the desired click position to lock the grip.

# Using the IR Remote Commander

## Before use

Before you use the supplied IR Remote Commander for the first time, pull out the insulation sheet from the battery holder.

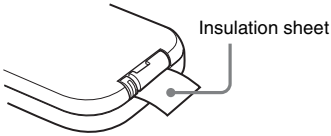


A CR2025 lithium battery is set in the holder at the factory.

## To use the IR Remote Commander

For controlling the camcorder from the IR Remote Commander, activate the remote control function of the camcorder after turning the power on.
Activating/deactivating the remote control function can be achieved using the Setup menu or an assignable button.

### To activate using the menu

Press the MENU button to set the camcorder to Menu mode, select the OTHERS menu *(page 100)* and set “IR Remote” to “On.”

### To activate using an assignable button

Assigning “IR Remote” to one of the assignable buttons *(page 49)* permits you to activate/deactivate the remote control function by pressing the button.

**Note**

To avoid malfunctions, the remote control function is automatically deactivated when the camcorder is turned off. Activate the function each time when required after you turn the camcorder on.

### Replacing the battery in the IR Remote Commander

Use a commercially available CR2025 lithium battery. Do not use any battery other than a CR2025.

**1 Hold down the lock lever ①, pull out the battery holder ②, and remove the battery.**

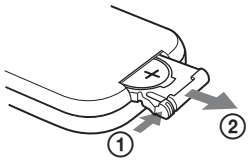


**2 Place a new battery in the battery holder with the + symbol facing upward ①, then push the battery holder into the IR Remote Commander until it clicks ②.**

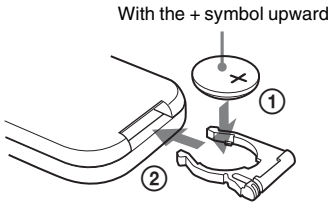


**WARNING**

- Battery may explode if mistreated.
  Do not recharge, disassemble, or dispose of in fire.
- Batteries shall not be exposed to excessive heat such as sunshine, fire or the like.

**CAUTION**

Danger of explosion if battery is incorrectly replaced. Replace only with the same or equivalent type recommended by the manufacturer.
When you dispose of the battery, you must obey the law in the relative area or country.

# Using SxS Memory Cards

This camcorder records audio and video on SxS memory cards (optional) inserted in the card slots.

## About SxS Memory Cards

### Usable SxS memory cards

Use the following Sony-made SxS memory cards. Operations are not guaranteed with memory cards other than the following cards.

**SxS PRO+ series**

**SxS PRO series**

**SxS-1 series**

These cards comply with the ExpressCard standard.

*For details on using SxS memory cards and usage-related precautions, refer to the instruction manual for the SxS memory card.*

SxS, SxS PRO and SxS-1 are trademarks of Sony Corporation.
The ExpressCard word mark and logo are owned by Personal Computer Memory Card International Association (PCMCIA) and are licensed to Sony Corporation. All other trademarks are the property of their respective owners.

## Inserting/Removing an SxS Memory Card

### Inserting an SxS memory card

**1 Open the cover of the card slot block *(page 12)*.**

**2 Insert the SxS memory card into the slot with the SxS label facing right.**

The ACCESS lamp *(page 12)* lights in red then changes to green once the memory card is ready for use.

**3 Close the cover.**

#### Status indications by the ACCESS lamps

Card slots A and B are accompanied by the respective ACCESS lamps to indicate their statuses.

| Lamp | Slot statuses |
|---|---|
| Lights in red | Accessing the loaded SxS memory card (writing/reading data) |
| Lights in green | Standby (ready for recording or playback using the loaded SxS memory card) |
| Off | • No SxS memory card is loaded.<br>• The loaded card is invalid.<br>• An SxS memory card is loaded, but another slot is active. |

### Removing an SxS memory card

**1 Open the cover of the card slot block, press the EJECT button *(page 12)*, then pull the button out.**

**2 Press the EJECT button again to remove the card.**

**Note**

Data are not guaranteed if the power is turned off or a memory card is removed while the card is being accessed. All data on the card may be destroyed. Be sure that the ACCESS lamps are lit in green or off when you turn off the power or remove memory cards.

## Switching Between SxS Memory Cards

When SxS memory cards are loaded in both card slots A and B, press the SLOT SELECT button *(page 12)* to select the card you wish to use.
If a card becomes full during recording, switching to the other card is automatically executed.

**Note**

The SLOT SELECT button is disabled while playback is in progress. Switching is not executed even if you press the button. The button is enabled while the thumbnail screen is displayed *(page 65)*.

## Formatting an SxS Memory Card

For an SxS memory card that is not formatted or that was formatted with another system, the message "Unsupported File System" is displayed on the viewfinder screen.
Format the card as instructed in *"To execute formatting"* below.

### To execute formatting

**Using "Format Media" *(page 105)* in the OTHERS menu, specify "Media(A)" (slot A) or "Media(B)" (slot B) then select "Execute." On a confirmation message, select "Execute" again.**

The in-progress message and status bar (%) are displayed, and the ACCESS lamp lights in red. When formatting is completed, the completion message is displayed for three seconds.

#### Recording/playback during formatting

You can perform recording or playback using the SxS memory card in the other card slot while formatting is in progress.

#### If formatting fails

A write-protected SxS memory card or memory card that cannot be used with this camcorder will not be formatted.
As a warning message is displayed, replace the card with an appropriate SxS memory card, as per the instructions in the message.

**Notes**

- Use the format function of this camcorder to format SxS memory cards for use on this camcorder. The formats of cards formatted on other devices are not recognized as valid formats, making it necessary to format them again on this camcorder.
- All the data, including recorded pictures and setup files, are erased when a memory card is formatted.



## Checking the Remaining Time Available for Recording

While recording (or standing by to record), you can check the time remaining for the SxS memory cards loaded in the card slots on the viewfinder screen *(page 16)*.
The available time for recording with the current video format (recording bit rate) is calculated according to the remaining space of each card and displayed in time units of minutes.
The remaining can also be checked in a meter format on the Battery/Media status screen *(page 77)*.

**Note**

A icon appears if the memory card is write-protected.

### Replacing an SxS memory card

- If the available time on two cards in total becomes less than 5 minutes, a message "Media Near Full," flashing of the tally lamps, and a beep sound will warn you. Replace the cards with those with sufficient space.
- If you continue recording until the total remaining time reaches zero, the message changes to "Media Full," and recording stops.

**Note**

Approximately 600 clips can be recorded on one SxS memory card at maximum.
If the number of recorded clips reaches the limit, the remaining time indication becomes "0," and the message "Media Full" is displayed.

## Restoring an SxS Memory Card

If an error occurs with data in a memory card for some reason, the card must be restored.
If an SxS memory card that needs to be restored is loaded, a message that prompts you to execute a restore operation is displayed on the viewfinder screen.

### To restore a card

**Select "Execute" by moving the joystick or turning the jog dial, then push the SEL/SET button or the jog dial.**

During restoration, the in-progress message and status bar (%) are displayed, and the ACCESS lamp is lit in red.
When restoration is completed, the completion message is displayed for three seconds.

#### If restoration fails

- A write-protected SxS memory card or one on which an error occurred cannot be restored. For such a card, a warning message is displayed. Release the write protection or replace the card, as per the instructions in the message.
- An SxS memory card on which an error occurred may become usable again through repeated formatting.
- In some cases, only parts of clips cannot be restored. Playback of the restored clips becomes possible again.
- The following operation may restore an SxS memory card for which the message "Could not Restore Some Clips" is repeatedly displayed each time you try the restoration process:
  1. Copy necessary clips to another SxS memory card, using the copy function *(page 71)* of the camcorder or the dedicated application software (supplied) *(page 111)*.
  2. Format the problem SxS memory card, using the format function of this camcorder.
  3. Return the necessary clips to the SxS memory card by copy operation.

#### Recording/playback during restoration

You can perform recording or playback using the SxS memory card in the other card slot while restoration is in progress.

**Note**

For restoration of media recorded with this unit, be sure to use this unit. Media recorded with a device other than this unit or with another unit of different version (even of the same model) may not be restored using this unit.

# Using Other Media

**Note**

A media adaptor cannot obtain the high reliability and durability equivalent to an SxS memory card for professional use.

## XQD Memory Cards

By using an optional QDA-EX1 Media Adaptor, you can insert an XQD memory card into the SxS memory card slot and use it instead of an SxS memory card.

### Usable XQD memory cards

QD-H16, QD-H32, QD-S32, QD-S64 (as of September 2013)

*For details on using a QDA-EX1 Media Adaptor, refer to the instruction manual supplied with it.*

**Notes**

- High-speed playback *(page 11)* may not be properly achieved with an XQD memory card.
- Slow Motion recording by the Slow & Quick Motion recording function *(page 52)* cannot be made with an XQD memory card.
- Not all XQD memory cards are guaranteed to work with this camcorder. For compatible memory cards, contact your dealer.

### Formatting

When you use an XQD memory card with this camcorder, formatting is required.
An XQD memory card to be used with this camcorder must be formatted using the format function of this camcorder.
It is also necessary to format an XQD memory card for use if a caution message is displayed when you mount the XQD memory card.
For an XQD memory card that was formatted with another system unsupported by this camcorder, the message "Unsupported File System" is displayed on the viewfinder screen. Format the XQD memory card as instructed below.

#### To execute formatting

**Using "Format Media" *(page 105)* in the OTHERS menu, specify "Media(A)" (slot A) or "Media(B)" (slot B), then select "Execute."**

An in-progress message and status bar (%) are displayed, and the ACCESS lamp lights in red. When formatting is completed, a completion message is displayed for three seconds.

**Note**

When formatting, all data in an XQD memory card—including protected images—are erased and cannot be restored.

#### Connection between the camcorder and a PC

To use an XQD memory card in which data have been recorded with an XDCAM/XDCAM EX-series product, insert it into the slot of the camcorder and connect between the PC and this camcorder using a USB cable.

#### To use media formatted with this camcorder in the slots of other devices

Make a backup of the media, then format it using the other device.

## SDHC Cards

Use of the optional MEAD-SD02 Media Adaptor permits you to insert an SDHC card to the SxS memory card slot and use it for recording and playback in the same way as with an SxS memory card.

### Usable SDHC card

Class 10 SDHC card

*For details on use of the MEAD-SD02 Media Adaptor, refer to the operating instructions supplied with the respective adaptor.*

**Notes**

- High-speed playback *(page 11)* may not be properly achieved with an SDHC card.
- Slow Motion recording by the Slow & Quick Motion recording function *(page 52)* cannot be made with an SDHC card.
- SDHC cards do not support recording with UDF/exFAT.

### Formatting

When you use an SDHC card with this camcorder, formatting is required.
An SDHC card to be used with this camcorder must be formatted using the format function of this camcorder.
It is also necessary to format an SDHC card for use if a caution message is displayed when you mount the SDHC card.

For an SDHC card that was formatted with another system unsupported by this camcorder, the message "Unsupported File System" is displayed on the viewfinder screen.
Format the SDHC card as instructed below.

#### To execute formatting

**Using "Format Media" *(page 105)* in the OTHERS menu, specify "Media(A)" (slot A) or "Media(B)" (slot B), then select "Execute."**

An in-progress message and status bar (%) are displayed, and the ACCESS lamp lights in red. When formatting is completed, a completion message is displayed for three seconds.

**Note**

When formatting, all data in an SDHC card including protected images are erased and cannot be restored.

#### Connection between the camcorder and a PC

To use an SDHC card in which data have been recorded with an XDCAM/XDCAM EX-series product, insert it into the slot of the camcorder and connect between the PC and this camcorder using a USB cable.

#### To use media formatted with this camcorder in the slots of other devices

Make a backup of the media, then format it using the other device.

## USB Flash Drives

In UDF/exFAT mode, you can connect a USB flash drive to the USB connector (type A) *(page 12)* to record, save and load the following data.

- *"Loading a Planning Metadata file" (page 62)*
- *"Storing/Retrieving the Setting Data" (page 61)*

The following Sony USB flash drives are recommended for use with this camcorder.

- USM-M Series

**Notes**

- Use USB flash drives with a capacity of 4 GB to 32 GB.
- USB flash drives other than those listed above may not be recognized if connected to the USB connector (type A).

#### When using the USB connector

Select "USB A" in "RM/USB A Sel" of the OTHERS menu.

**Notes**

- No signal can output from the VIDEO connector in this setting.
- The character information cannot be output regardless of the "SDI/HDMI/Video Out Super" setting.

### Formatting (Initializing) USB Flash Drives

USB flash drives must be formatted with the FAT32 file system.

**Note**

Before using a drive, format it on this camcorder or a PC. If a drive formatted on a PC cannot be used, format it on the camcorder.

1. **Connect a USB flash drive to the USB connector (type A).**

   If the drive is unformatted or has been formatted to other specifications, a message to confirm whether formatting is to be executed appears on the viewfinder screen.

2. **Using the joystick or the jog dial, select "Execute," then press the SEL/SET button or the jog dial.**

   The in-progress message and status bar (%) are displayed, then formatting starts.
   When formatting is completed, the message "Format USB Memory Done" is displayed.
   The \MSSONY\PRO\XDCAM\MEMDISC folder and the \General\Sony\Planning folder are automatically created in the drive.

#### If the format operation fails

A format operation may fail because the USB flash drive is write protected, or because it is not the type of drive specified for use with this camcorder.
In this case, an error message appears. Follow the instructions in the error message and exchange the drive for one that can be used with this camcorder.

### Restoring USB Flash Drives

When you load a USB flash drive that cannot be mounted normally because the file system is destroyed, a message appears on the viewfinder screen to ask whether you want to restore it. Using the joystick or the jog dial, select "Execute," then press the SEL/SET button or the jog dial. Formatting starts and a progress (%) indication appears.

When formatting is completed, the message "Restore USB Memory" is displayed.

"XQD" is a trademark of Sony Corporation.

# Using Wi-Fi Connection

Mounting an optional IFU-WLM3 USB Wireless LAN Module on this camcorder allows a Wi-Fi connection between a computer and the camcorder.

*You can also connect the camcorder and computer via Wi-Fi by using the optional CBK-WA100 Wireless Adapter. For details on connection and operation of the CBK-WA100, refer to the Operating Instructions supplied with the CBK-WA100.*

Making a Wi-Fi connection between a computer and the camcorder enables you to do the following.

- Send planning metadata created on a computer to the camcorder, and set names of clips to shoot and shot marks for shooting.

**Notes**

- The IFU-WLM3 USB Wireless LAN Module (sold separately) may not be available in some countries/regions.
- Attach/remove the IFU-WLM3 after the camcorder is turned off.
- If you use a wireless device near the camcorder, the camcorder may not work correctly. Turn the wireless device off near the camcorder.

### When using the USB connector

Select "USB A" in "RM/USB A Sel" of the OTHERS menu.

**Notes**

- No signal can output from the VIDEO connector in this setting.
- The character information cannot be output regardless of the "SDI/HDMI/Video Out Super" setting.

## Using the Web Menu

You can operate the Web menu built in the camcorder from a computer when it is connected to the camcorder via a Wi-Fi connection.
The Web menu allows you to check the camcorder's information/setting status, and upload Planning Metadata.

**Note**

You cannot access the Web menu while recording/playing. (You cannot send/receive a file via a Wi-Fi connection.)

## Example Web menu

### Product Information

- Model name
- Serial No.

### Network

- MAC Address
- IP Address
- Subnet Mask

### Wi-Fi Status

- Wireless Mode
- SSID
- Type
- Channel
- Authentication (network authentication)
- Data Encryption (data encryption)

### Planning Metadata

Clicking "Upload" displays the Planning Metadata screen which allows upload of a planning metadata file *(page 36)*.

**Note**

The configuration of items displayed in the Web menu varies depending on the browser you are using.

## To display the Web menu

1. **Launch a browser on the computer, and navigate to "http://<camcorder's IP address> (the "IP Address" setting in "Network" of the OTHERS menu)".**

   **Example (when the IP address is "192.168.1.10"): Type "http://192.168.1.10/" in the address bar.**
   **If the connection is complete, a dialog appears asking you to enter the user name and password.**

2. **Enter the user name and password, and click "OK."**

   **User name:** admin
   **Password:** pmw-300 (Lower-case the model name.)

## To upload a planning metadata file

1. **Insert a media such as an SxS memory card.**

2. **Click "Upload" in the Web menu.**

   The Planning Metadata screen appears.

3. **Click "Select" to show Choose File dialog.**

4. **Select the planning metadata file you want to upload, and then click "Open".**

   The path of the selected file appears.

5. **Click "Execute".**

   The planning metadata file is loaded into the camcorder's memory and stored in the media.
   "OK" appears in the Status field when the transfer is complete.

# Using the Wi-Fi Remote Commander

When a Wi-Fi connection is established between a device such as smartphone, tablet, PC, etc., and the camcorder, the Wi-Fi remote commander appears on the device screen and the device can be used as a remote commander.
You can start/stop recording, adjust iris/focus/zoom, etc., with a Wi-Fi connected device. This function is useful for setting the camcorder in a remote place, such as the top of a crane, etc.

**Notes**

- When iris is not set to auto, "IRIS" slider operation and ON/OFF setting of "Auto IRIS" are not available.
- When the focus ring is pulled rearward, "FOCUS" slider operation and ON/OFF setting of "Auto Focus" are not available.
- When the ZOOM switch is set to "MANUAL," "ZOOM" slider operation is not available.

### The displays of Wi-Fi remote commander

### For smartphone

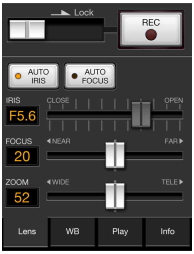


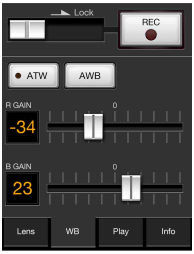

**For Tablet**

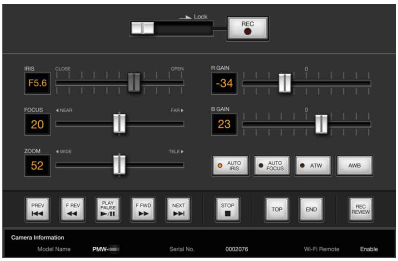


## To display the Wi-Fi remote commander

To display the Wi-Fi remote commander on a device screen, settings are required on both the device and camcorder.

### Camcorder settings

**1 Set "Wi-Fi" in "Wi-Fi" of the OTHERS menu to "Enable."**

**2 Set "Wi-Fi Remote" in "Wi-Fi" of the OTHERS menu to "On."**

### Device settings

Set the smartphone, tablet, PC, etc., to be used as the Wi-Fi remote commander.

**1 Make a Wi-Fi connection between the device and camcorder.**

**2 Launch the browser and input http://<camcorder's IP address>*(page 106)*/rm.html in the address bar.**

Example: When the IP address is 192.168.1.10, input http://192.168.1.10/rm.html in the address bar.
The Wi-Fi remote commander will appear on the device screen when the Wi-Fi connection is established.
Thereafter operate the camcorder as shown on the screen of the Wi-Fi connected device.

The REC button becomes unavailable when the Lock switch is dragged to the right.

**Notes**

- Depending on the device, the Wi-Fi remote commander may not appear properly on the device's screen even though you input http://<camcorder's IP address>*(page 106)*/rm.html in the address bar. In this case, input "rms.html" for a smartphone or "rmt.html" for a tablet at the end of the address to display the Wi-Fi remote commander properly.
- The Wi-Fi remote commander on the device's screen may no longer match the actual status of the camcorder in the following cases. When this happens, refresh the browser on the device.
  —when the camcorder is restarted while the Wi-Fi connection is established
  —when the camcorder is controlled directly while the Wi-Fi connection is established
  —when the device is reconnected
  —when you operate forward/backward on the device's browser.
- If the Wi-Fi signal is poor, the Wi-Fi remote commander may not work properly.
- Your smartphone/tablet may not be compatible with the ad hoc mode. For details, refer to the operating instructions supplied with the smartphone/tablet.

## Compatible devices

The following devices, using the specified versions or higher, can be used as Wi-Fi remote commanders.

| Device | OS | Browser |
|---|---|---|
| PC | Windows 7 | Internet Explorer 8 or Internet Explorer 9 |
| Mac | OS 10.7.4 | Safari 5.1.6 |
| Smartphone | Android 2.3.3 | Standard browser |
| | iOS 5.1.1 | Safari |
| Tablet | Android 4.0.3 | Standard browser |
| | iOS 5.1.1 | Safari |

# Basic Operation Procedure

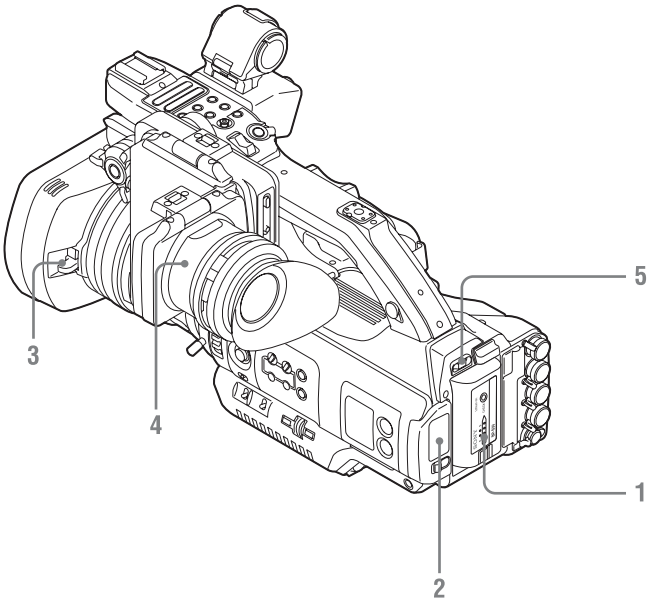


## Preparations

**1 Mount a fully charged battery pack.**

**2 Load SxS memory card(s).**

If you load two cards, recording is continued by automatically switching to the second card when the first card becomes full.

**3 Open or remove the lens cap.**

**PMW-300K1**
Pull up on the lens cap open/close lever to open the lens cap built in the lens hood.
**PMW-300K2**
Remove the lens cap.

**4 Adjust the viewfinder for best viewing.**

**5 Set the power switch to the ON position.**

The recording screen is displayed.

When using the remote commander, activate the remote control mode *(page 29)*.

**Note**

When you hold the camcorder by the grip, support it from underneath with your left hand.

## Recording (Full Auto mode)

**6 Press the FULL AUTO button so that the button indicator lights.**

Full Auto mode is turned on, activating the TLCS (Total Level Control System) *(page 86)*. Auto Iris, AGC (Auto Gain Control), Auto Shutter, ATW (Auto Tracing White Balance) are set to ON, consequently the brightness and white balance will be automatically adjusted.
When you wish to adjust them manually, turn Full Auto mode off, and see;
*"Iris" on page 43*
*"Gain" on page 42*
*"Electronic Shutter" on page 43*
*"White Balance" on page 41*

**Note**

AF (Auto Focus) is not activated by setting the camcorder to Full Auto mode.

*For information of automatic focus adjustment, see "Focus" (page 44).*

**7 Press the REC START/STOP button.**

You can also start recording with the START/STOP button (PMW-300K1)/VTR button (PMW-300K2) on the grip.
(If you are using the IR Remote Commander, press the REC button simultaneously with the unmarked button.)
The front and rear tally lamps light and recording begins.

**8 To stop recording, press the REC START/STOP button again.**

You can also stop recording with the START/STOP button (PMW-300K1)/VTR button (PMW-300K2) on the grip.
(If you are using the IR Remote Commander, press the REC PAUSE button simultaneously with the unmarked button.)
Recording stops and the camcorder enters STBY (recording standby) mode.

**Note**

If you press the REC START/STOP button to start next recording while previous data writing is not completed, the message "Cannot Proceed" may be displayed and recording may not start.

### To prevent a switching error

The REC START/STOP button on the handle is incorporated with the REC HOLD lever. If the REC START/STOP button on the handle will not be used, it is recommended to set the lever to the HOLD position to lock the button and prevent unintentional starting/stopping of recording if you accidentally press the button.
To unlock the button, return the lever to its original position.

## Checking the last recorded clip (Rec Review)

**9 Press the REC REVIEW button (PMW-300K1)/RET button (PMW-300K2).**

The Rec Review function *(page 49)* is activated, and the last recorded clip is played back for the specified time on the viewfinder screen.

### To delete clips

You can delete the last recorded clip by using the Last Clip DEL function *(page 61)*. Use the All Clips DEL function *(page 61)* to delete all recorded clips from an SxS memory card. To specify a clip to be deleted, operate the camcorder from the thumbnail screen *(page 65)*.

### Clip (recording data)

When you stop recording, video, audio and subsidiary data from the start to end of the recording are recorded as a single clip on an SxS memory card.

### Clip name

For each clip recorded with this camcorder, a clip name is automatically generated according to the method selected with "Auto Naming" in "Clip" *(page 104)* in the OTHERS menu.
The default setting of "Auto Naming" is "Plan." With this setting, a clip name defined in planning metadata is applied if a planning metadata file is loaded into the camcorder.
Change the "Auto Naming" setting to "Title" to apply a clip name composed of 4 to 46 alphanumerics and 4 numerics.
**Example:** ABCD0001
The block of 4 to 46 alphanumerics can be specified as desired using "Clip" in the OTHERS menu before you start recording. (It cannot be changed after recording.)
The value of the 4 numerics is automatically counted up in sequence.

### Notes on Clips

The maximum file size for a clip is 43 GB for UDF/exFAT, 4 GB for FAT in HD Mode, and 2 GB for FAT in SD Mode. If you continue recording for an extended period, recorded materials may be segmented into multiple files, depending on the file size (the maximum number of partitions is 99). The camcorder regards continuous recording as one clip even if it has been segmented into multiple files.
A long clip can be recorded crossing over two memory cards in slot A and B.
When you copy recorded clips to a hard disk, etc., via computer, it is recommended to use the dedicated application software, which you need to download, to maintain the continuity of recorded materials. For details, see *"Software Downloads" (page 145)*.

**Note**

If copying is done using Explorer (Windows) or Finder (MAC), the continuity and relationships of recorded materials may not be maintained.

**Maximum duration of a clip**

The maximum clip length is 24 hours for FAT (MP4 or AVI) and 6 hours for UDF (MXF)/ exFAT (XAVC).
If you exceed the maximum clip length, a new clip will be automatically created. You can check the new clip on the thumbnail screen.



# Changing Basic Settings

You can make changes to the settings based on the intended usage of the recorded video or recording conditions.

## Video Formats

Selectable formats vary depending on the UDF/ exFAT/FAT, HD Mode/SD Mode, and usage region (NTSC Area/PAL Area) settings.

*You can change the usage area by setting "Country" in "System" (page 102) in the OTHERS menu.*

### Switching between UDF/exFAT/FAT

Switch by setting "F.Sys." in "System" *(page 102)* in the OTHERS menu.
After switching this setting, the camcorder will automatically restart.

**Note**

UDF/exFAT/FAT cannot be switched during recording or playback.

### Switching between HD Mode/SD Mode

For HD/SD switching, use "System" *(page 102)* in the OTHERS menu.
When you change the menu setting, the camcorder automatically restarts, executing the switching.

**Note**

HD/SD switching is disabled during recording and playback.

### Changing the format

To change the format, use "Format" in "System" *(page 102)* in the OTHERS menu.
Signals from the SDI OUT, VIDEO OUT, and HDMI OUT connectors are also output according to the format selected with this menu.

## ND Filter

ND filters are available for keeping the aperture in a proper range.
**1/64:** 1/64ND
**1/16:** 1/16ND
**1/4:** 1/4ND
**CLEAR:** ND filter not used

## White Balance

You can select the adjustment mode according to the shooting conditions.

### Preset mode

The color temperature is adjusted to the preset value (factory setting: 3200K) in this mode. Select this mode when there is no time to adjust the white balance or when you wish to fix the white balance to the condition of you set for a Picture Profile.

### Memory A mode, Memory B mode

The white balance is adjusted to the value stored in memory A or memory B.
Pressing the WHITE BAL button executes auto white balance and stores the adjusted value in memory A or memory B.
When the Wi-Fi remote commander is used and the ATW function is set to off, the adjusted value is changed to the one in memory A, irrespective of the status of the WHITE BAL switch.

### ATW (Auto-Tracing White balance) mode

In this mode, the camcorder automatically adjusts the white balance to the appropriate condition. When the color temperature of the light source changes, the white balance adjustment is automatically executed.
Five steps of adjustment speed can be selected with "ATW Speed" *(page 86)* in the CAMERA SET menu.
When the ATW Hold function is assigned to an assignable button *(page 49)*, you can momentarily hold the ATW value to fix the white balance, even in ATW mode, by pressing the button.

**Note**

Under some conditions of lighting or the shooting subject, adjustment by ATW may fail to provide proper colors.
Examples:

- When the subject of a substantially single color like sky, sea, ground, grass, or certain kinds of flowers occupies most of the frame area.
- When the subject is under a light source of extremely high or extremely low color temperature.

If execution of automatic tracing by the ATW function takes an unacceptably long time or only results in an inadequate effect, then execute the AWB function.

### Using the switch

Make a selection with the WHITE BAL switch *(page 11)*.
**B:** ATW mode or Memory B mode
**A:** Memory A mode
**PRST:** Preset mode
The B position of the WHITE BAL switch is assigned to ATW mode at the factory. The setting can be changed with "White Switch <B>" *(page 86)* in the CAMERA SET menu to select Memory B mode.
Setting the camcorder to Full Auto mode *(page 38)* forcibly activates ATW mode.
Assigning the ATW on/off function to an assignable button *(page 49)* permits you to independently activate/deactivate ATW when Full Auto mode is off.

### Using the Direct menu

When you set the DISPLAY switch *(page 12)* to ON, the current adjustment mode and color temperature are displayed on the screen *(page 16)*.
**ATW:** ATW mode
**W:A:** Memory A mode
**W:B:** Memory B mode
**W:P:** Preset mode
When the Direct menu *(page 17)* is in All mode, you can select from among ATW, W:A, W:B, and W:P.
When the Direct menu is in Part mode, you can switch between ATW and the mode set with the WHITE BAL switch.

## Executing Auto White Balance

**1 To store the adjustment value in memory, select Memory A or Memory B mode.**

**2 Place a white subject under the same lighting condition and zoom in on it so that a white area is obtained on the screen.**

**3 Adjust the brightness.**

Adjust Iris as instructed in "Adjusting the brightness manually" *(page 44)* below.

**4 Press the WHT BAL button *(page 10)*.**

Auto white balance adjustment begins.

When you execute the adjustment in a memory mode, the adjusted value is stored in memory (A or B) selected in step 1.

When you execute the adjustment in ATW mode, adjustment in ATW is resumed.

**Notes**

- Auto white balance adjustment cannot be performed when in Preset mode.
- If auto white balance adjustment fails, an error message is displayed on the screen for approximately 3 seconds. If the error message continues to be displayed after several attempts, consult your Sony service representative.

# Markers/Zebra Patterns

During recording, various markers and zebra patterns can be inserted into the image on the viewfinder screen.

This does not affect recording signals.

## Displaying the Markers

Use "Marker" *(page 92)* in the VF SET menu.

## Displaying the Zebra Patterns

Sliding the ZEBRA switch turns the zebra pattern-indication on/off.

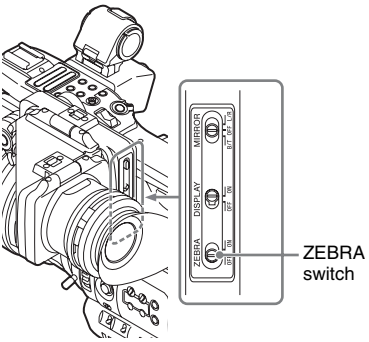


## Changing the zebra pattern

Using "Zebra" *(page 93)* in the VF SET menu, you can change the zebra pattern to be displayed.

# Gain

## Recording with Fixed Gain

You can change the gain of the video amplifier.

### Selecting the gain with the switch

The gain value at each of the GAIN switch *(page 11)* positions set at the factory are as follows:

**L:** 0 dB
**M:** 9 dB
**H:** 18 dB

These values can be changed in the range of –3 dB to +18 dB, using the CAMERA SET menu's Gain Setup menu *(page 81)*.

**Note**

You cannot select a fixed gain when AGC mode is set to On.

### Selecting gain using the Direct menu

When you set the DISPLAY switch *(page 12)* to ON, the current gain value is displayed on the screen *(page 16)*.

When the Direct menu is in All mode, you can change the gain in steps of 3 dB with the Direct menu.

You can also select AGC mode with the Direct menu.

When the Direct menu is in Part mode, you can switch between only AGC mode and the gain selected with the GAIN switch.

### Recording in AGC Mode

The gain of the video amplifier is automatically adjusted according to the picture brightness.
When you set the camcorder to Full Auto mode *(page 38)*, AGC mode is forcibly selected.
When Full Auto mode is off, you can independently turn AGC mode on by setting "AGC" in "TLCS" *(page 86)* in the CAMERA SET menu to "On," or selecting "AGC" with the Direct menu.

## Electronic Shutter

### Recording with a fixed shutter

Set the shutter speed (cache time).
When you set the SHUTTER switch *(page 11)* to ON, the fixed shutter is turned on in the mode and with the shutter speed you specified with "Shutter" *(page 81)* in the CAMERA SET menu.

**Notes**

- When Auto Shutter mode is ON, the fixed shutter cannot be selected.
- When the SLS/EX SLS mode *(page 43)* is ON, the fixed shutter cannot be selected.

#### Setting with the CAMERA SET menu

The shutter mode and shutter speed can be set with "Shutter" *(page 81)* in the CAMERA SET menu.

#### Setting with the Direct menu

When you set the DISPLAY switch to ON, the current shutter mode and the set value are displayed *(page 16)*.
When the Direct menu *(page 17)* is in All mode, you can change the shutter mode and speed with the Direct menu.

**Notes**

- When the Direct menu is in Part mode, you cannot turn the shutter off with the Direct menu if the SHUTTER switch is set to ON.
  If the SHUTTER switch is set to OFF, you can switch only between Auto Shutter and Shutter OFF.
- The Direct menu cannot be selected when Full Auto mode is turned on *(page 38)* or when the SLS/EX SLS mode is set.

### Shooting in SLS/EX SLS Mode

The shutter speed is specified in the number of accumulated frames. Up to 64 frames can be accumulated in this mode, permitting you to obtain low-noise clear pictures in low light levels or surreal pictures with afterimages.
For SLS/EX SLS, specify the number of accumulated frames with "SLS/EX SLS" *(page 81)* in the CAMERA SET menu. You can select from 2 to 8, 16, 32, 64 frames.
When SLS/EX SLS is ON, you cannot set Full Auto mode *(page 38)*.
When Full Auto mode *(page 38)* is ON or Auto Shutter mode is ON, and SLS/EX SLS is set to ON, Full Auto mode or Auto Shutter mode is canceled.

### Shooting in Auto Shutter Mode

The shutter speed is automatically adjusted according to the picture brightness.
When you set the camcorder to Full Auto mode *(page 38)*, Auto Shutter is forcibly selected.
When Full Auto mode is off, you can independently turn Auto Shutter mode on by setting "Auto Shutter" in "TLCS" *(page 86)* in the CAMERA SET menu to "On."

## Iris

Adjust the brightness according to the subject.

### Recording in auto mode

**When Full Auto mode *(page 38)* is set to ON:**
Iris is forcibly set to Auto mode.
**When Full Auto mode is set to OFF:**
When the IRIS switch is set to AUTO, Auto Iris mode is set.
You can select the target level (to make the picture darker or brighter) for Auto Iris via the Setup menu or Direct menu. (The gain control in AGC mode and the shutter speed control in Auto Shutter mode are adjusted in synchronization.)

#### To adjust the target level with the Setup menu

Set "Level" in "TLCS" *(page 86)* in the CAMERA SET menu.

#### To adjust the target level with the Direct menu

The target level can also be selected using the Direct menu *(page 17)*. When you set the

DISPLAY switch to ON, the current Exposure position is displayed on the screen *(page 16)*.

### Adjusting the brightness manually

When Full Auto mode is set to OFF, setting the IRIS switch to MANUAL sets to Manual Iris mode. Rotate the iris ring for the desired iris opening.

#### To momentarily switch to auto iris mode

When you press the IRIS button (PMW-300K1)/ IRIS PUSH AUTO button (PMW-300K2) in manual iris mode (IRIS switch: MANUAL), one-push auto iris mode is activated. Auto iris mode is activated while you press and hold the button, and manual iris mode is restored when you release the button.



## Zoom

### Operating Zoom manually

Setting the ZOOM switch *(page 13)* on the bottom of this unit to the MANUAL position sets to manual zoom mode.

### Using the Power Zoom

The servo zoom lever *(page 15)* on the grip and the on-handle ZOOM button *(page 11)* are activated.
The supplied IR Remote Commander and optional lens remote control unit can also be used.
Setting the ZOOM switch on the bottom of this unit to the SERVO position sets to power zoom mode.
The current zoom position is displayed on the screen in the range of 0 (Wide) to 99 (Tele) when you set the DISPLAY switch to ON.
The numerical indication can be changed to that in a bar by changing "Zoom Position" in "Display On/Off" *(page 94)* in the VF SET menu.

#### To adjust with the power zoom lever on the grip

Pressing the lever deeper sets zooming faster.

#### To adjust with the on-handle ZOOM button

You can select the zoom speed with "Handle Zoom" *(page 82)* in the CAMERA SET menu.
The "Vari" setting enables faster zoom speed the deeper the on-handle ZOOM button is pressed as in the case of the power zoom lever on the grip.
You can set the zoom speed at "High" and "Low" in "Zoom Speed" *(page 82)*.
You can select Soft mode for zooming by using "Zoom Transition" *(page 83)* in the CAMERA SET menu, in which the zooming speed is gradually increased at the beginning then gradually decreased for the end.

#### When adjusting with the ZOOM T/W button of the IR Remote Commander

The zooming speed depends on the "Remote" *(page 82)* setting in "Zoom Speed" in the CAMERA SET menu.

*To use the IR Remote Commander, see "Using the IR Remote Commander" (page 29).*

### When using a lens remote controller

Zooming can also be controlled from an optional lens remote controller connected via the LENS REMOTE connector.

*For operation, refer to the operation guide of the lens remote controller.*

## Focus

The infinity (∞) position has some margin to compensate for focus change caused by variation in ambient temperature. When shooting an image at infinity in MF mode, adjust the focus while observing the image on the viewfinder screen.

### Adjusting in Full MF Mode

Pull the focus ring rearward (toward the camcorder body) to set the camcorder to Full MF mode. Focus can only be adjusted with the focus ring manually.

**Note**

The focus instantly moves to the range index position when you pull the focus ring rearward.

Rotate the focus ring for the best focus while observing the picture on the viewfinder screen. The range index of the focus ring is effective in Full MF mode. The distances correspond to the focus ring positions.

#### Expanded Focus

**PMW-300K1:**
When you press the EXPANDED FOCUS button, the center area of the picture is magnified

on the viewfinder screen, making the focus adjustment easier.
Press the EXPANDED FOCUS button again or leave the focus ring unmoved for 5 seconds to resume the normal angle for recording.
**PMW-300K2:**
The Expand Focus function can be used by assigning it to an assignable button *(page 49)*.

#### Peaking

When you turn the PEAKING control from its left-end position, the peaking function is activated. This function emphasizes the contours of the images in the viewfinder, making manual focusing easier.
The emphasis level is increased by turning the control clockwise.
This function does not affect recording signals.
Turning the control back to its left stop position deactivates the peaking function.
The emphasis level and color of the contours can be set with "Peaking" *(page 92)* of the VF SET menu.

### Adjusting in MF Mode

MF (Manual Focus) mode allows you to activate Auto Focus momentarily when required.
Slide the focus ring forward (to lens hood side), then set the FOCUS switch *(page 14)* to MANUAL.
In this mode, expanded focus function, peaking function, one-push auto focus function and the MF Assist function are activated.
Rotate the focus ring while looking at the viewfinder screen to adjust the focus.

#### One-Push (Momentary) Auto Focusing

When you press the PUSH AF button, auto focusing momentarily activates. One-Push Auto Focusing is terminated when the subject comes into focus.

#### MF Assist function

If you set "MF Assist" *(page 82)* in the CAMERA SET menu to "On" to enable the MF Assist function, auto focusing is engaged when you stop rotating the lens operation ring, performing fine focus adjustment for the subject in the center of the screen. When the fine adjustment is completed, automatic focusing with the MF Assist function is terminated.
You can also enable the MF Assist function via the Direct menu *(page 17)*. When you set the DISPLAY switch to ON, the selected focus mode is displayed on the screen *(page 16)*. The Direct menu cannot be selected in a mode other than MF mode.

### Adjusting in AF Mode

AF (Auto Focus) mode adjusts the focus automatically.
Slide the focus ring forward, then set the FOCUS switch to AUTO.

### Using Macro Mode

When you set the MACRO switch to ON in AF or MF mode, Macro mode is activated, permitting you to adjust the focus in a range that includes the macro area.
The Macro mode is invalid in Full MF mode.

## Eliminating Picture Blurring (Steady Shot) (PMW-300K1 only)

By activating the Steady Shot function of the supplied lens, blurring of images due to camera shaking can be reduced.

**Press the STEADY SHOT button on the lens.**

Pressing the button turns the Steady Shot function ON or OFF.
The setting of the Steady Shot function is displayed in the viewfinder.

**Note**

If the camcorder is fixed to a tripod for stable condition, deactivate the Steady Shot function.

## Flickers

### Setting the shutter speed according to the power-supply frequency

Activate the electronic shutter *(page 43)* and set the shutter speed according to the power supply frequency.

#### When the frequency is 50 Hz

Set the shutter speed to 1/50 or 1/100 seconds.

#### When the frequency is 60 Hz

Set the shutter speed to 1/60 or 1/120 seconds.

### Using the Flicker-Reduction function

Set “Mode” in “Flicker Reduce” *(page 82)* in the CAMERA SET menu to “Auto” or “On” and set “Frequency” to the power-supply frequency (50 Hz or 60 Hz).

**Note**

If the frame rate selected for recording is close to the power-supply frequency, flicker may not be reduced sufficiently even if you activate the Flicker-Reduction function. In such cases, use the electronic shutter.

## Time Data

### Setting the Timecode

Specify the timecode to be recorded with “Timecode” and “TC Format” in the TC/UB SET menu *(page 96)*.

### Setting the Users Bit

You can add a hexadecimal number of 8 digits for pictures as the user bits.
The user bits can also be set to the current date. Use “Users Bit” *(page 96)* in the TC/UB SET menu.

### Displaying the Time Data

Setting the DISPLAY switch to ON displays the time data on the screen *(page 16)*.
The indication is switched among the timecode, user bits, and recording duration each time you press the DURATION/TC/U-BIT button *(page 11)*.

| Display | Contents |
|---|---|
| TCG **:**:**:** | Timecode |
| CLK **:**:**:** | Timecode (Clock mode) |
| UBG ** ** ** ** | User bits |
| DUR **:**:** | Duration from the beginning of recording |

# Recording Audio Signals

Four channels (CH-1/CH-2/CH-3/CH-4) of audio can be recorded (Linear PCM recording) in synchronization with video recording.
You can use the built-in stereo microphones (omni-directional electret condenser microphones) or 2-channel external audio inputs to the AUDIO IN connectors by switching with the AUDIO IN switches.

## Using the Built-in Stereo Microphones

**Set the AUDIO IN switches, both CH-1 and CH-2 *(page 11)*, to INT.**

## Using External Inputs

1. **Set the AUDIO IN switches CH-1 and CH-2 to EXT.**
2. **Connect external audio sources to the AUDIO IN connectors CH-1 and CH-2 *(page 10)*.**
3. **Set the input (LINE/MIC/MIC+48V) switches CH-1 and CH-2 *(page 10)* to LINE (line level: +4 dBu).**

## Using an External Microphone

You can use an external microphone for recording, such as the ECM-673 Electret Condenser Microphone.

1. **Lift up the handle of the external microphone holder *(page 10)* and open the cover.**
2. **Attach a microphone, then return the external microphone holder cover to its original position to secure it.**

**3** **Connect the microphone cable to the AUDIO IN CH-1/CH-2 connectors.**

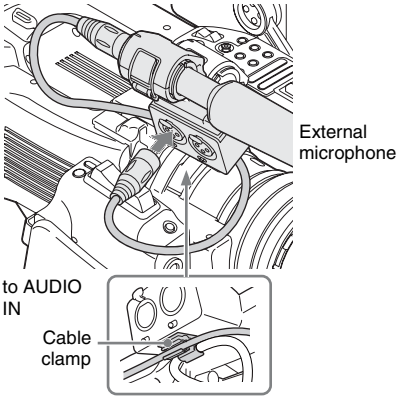


**4** **Set the corresponding AUDIO IN switch (CH-1/CH-2) *(page 11)* to EXT.**

**5** **Set the corresponding input (LINE/MIC/MIC+48V) switch (CH-1/CH-2) *(page 10)* according to the connected microphone.**

**MIC:** For a microphone that requires no power supply

**MIC +48V:** For a microphone that requires +48V power supply (such as the ECM-673)

## Adjusting the Audio Recording Levels

### To adjust the levels automatically (AGC)

When the AUDIO SELECT switches CH-1 and CH-2 *(page 11)* are set to AUTO, the audio recording levels are automatically adjusted.

### To adjust the levels manually

Set the AUDIO SELECT switches CH-1 and CH-2 to MANUAL and adjust the audio recording levels by turning the AUDIO LEVEL knobs *(page 11)*.

Set the controls to 5 for the reference setting (0 dB). Setting to 10 maximizes the level (+12 dB), and setting to 0 minimizes it (–∞).

The input levels are displayed on the screen when you set the DISPLAY switch *(page 16)* to ON.

### Audio recording in special recording modes

No audio recording is made in Interval Recording or Frame Recording.

No audio recording is made in Slow & Quick recording if the recording frame rate is set to a value different from the playback frame rate.

## Monitoring the Audio

You can monitor the sounds being recorded with the headphones connected to the headphone connector (stereo mini jack) *(page 10)*.

**Note**

The built-in speaker is disabled during recording (or when standing by to record).

**To adjust the audio monitoring volume**

Use the VOLUME buttons *(page 11)*.

# Useful Functions

## Color Bars/Reference Tone

By setting "Camera/Bars" in "Color Bars" *(page 82)* in the CAMERA SET menu to "Bars," you can output a color-bar signal in place of the camera picture. When this item is set to "Camera," the output returns to the camera picture.
A 1-kHz reference tone is output with the color bar signal if "1KHz Tone" in "Audio Input" *(page 88)* in the AUDIO SET menu is set to "On."
The color-bar signal and reference-tone signal are also fed out from the SDI OUT, HDMI OUT, i.LINK, and VIDEO OUT (color bars only) connectors.
You can select the type of color bars with "Bars Type" in "Color Bars" in the CAMERA SET menu.

**Notes**

- The color bar mode cannot be output in Slow & Quick Motion mode and SLS/EX SLS mode.
- You cannot switch to "Color Bars" while recording. (Switching from "Color Bars" to "Camera" is available.)

## Shot Marks

When you record shot marks for important scenes of a clip recorded in UDF, exFAT, or FAT HD as subsidiary data, you can access the marked points easily on a Shot Mark screen *(page 73)*, which only displays scenes with shot marks only. This increases editing efficiency.
The camcorder permits you to record two types of shot marks: shot mark 1 and shot mark 2.
Shot marks can be recorded as needed during recording or can be added after recording while checking the playback pictures on the thumbnail screen.

### Inserting a shot mark during recording

Activate the IR Remote Commander *(page 29)*, and press the SHOTMARK 1 or SHOTMARK 2 button where you want to insert a shot mark. If the Shot Mark1 or Shot Mark2 function is assigned to an assignable button *(page 49)*, you can also use that button.

*For operations to add shot marks after recording, see "Adding Shot Marks During Playback (UDF/exFAT/FAT HD Mode)" on page 68 and "Adding/Deleting Shot Marks (UDF/exFAT/FAT HD Mode)" on page 74.*

*For operation to apply a name to a shot mark, see "Defining Shot Mark names in Planning Metadata" on page 64.*

## OK/NG/KP Flags (for UDF/exFAT Only)

You can add OK/NG/KP flags to clips recorded with UDF/exFAT. By adding flags, you can set the camcorder to display only clips with certain flag settings on the thumbnail screen (OK/NG/KP/None-Clip thumbnail screen) *(page 66)*.

**Note**

Use the "Lock Clip" setting *(page 69)* to protect clips.

### Adding a flag

**During recording or playback, press the assignable button to which you assigned the Clip Flag OK/Clip Flag NG/Clip Flag Keep function.**

You can add an OK/NG/KP flag to a clip during recording or playback.

### Deleting a flag

**Press the assignable button, twice in succession, to which you assigned the Clip Flag OK/Clip Flag NG/Clip Flag Keep function.**

You can delete the OK/NG/KP flag from a clip.

*OK/NG/KP flags can also be added and deleted from the thumbnail screen. For details, see "Adding/Deleting a Flag (UDF/exFAT Only)" (page 71).*

## OK Mark (for FAT HD Mode Only)

By adding the OK mark to a clip recorded in FAT HD Mode, you can prevent the clip from being deleted or divided inadvertently. You can also set the camcorder to display only clips with the OK

mark on the thumbnail screen (OK-Clip thumbnail screen) *(page 66)*.

### Adding the OK mark

**When recording of a clip ends, press the assignable button to which you assigned the OK Mark function.**

While standing by to record, you can also add an OK mark to the last-recorded clip ("Last Clip") on the selected memory card.

### Deleting the OK mark

**Press the assignable button to which you assigned the OK Mark function, and select "Execute."**

While standing by to record, you can also delete the OK mark from the clip with the last-added OK mark.

### Adding or deleting the OK mark to or from clips before the last one

Make changes via the thumbnail screen.

*For details on making settings, see "Adding/Deleting the OK Mark (FAT HD Mode Only)" (page 71).*

## Rec Review

You can review the last recorded clip on the screen (Rec Review).

**Press the REC REVIEW button (PMW-300K1)/RET button (PMW-300K2) *(page 15)* after recording is finished.**

If the Rec Review function is assigned to an assignable button *(page 49)*, you can also use that button.
The last 3 seconds, 10 seconds, or the entire part of the clip is displayed, depending on the "Rec Review" setting *(page 86)* in the CAMERA SET menu.
Rec Review is terminated at the end of the clip, resuming STBY (recording standby) status.

#### To interrupt Rec Review

Press the REC REVIEW button (PMW-300K1)/RET button (PMW-300K2), STOP/CAM button, or the assignable button to which you assigned the Rec Review function.

**Notes**

- During Rec Review playback, the playback control buttons other than the STOP/CAM button are disabled.
- If the video format was changed after recording, Rec Review cannot be performed (except when the change was from SP 1440×1080/23.98P to SP 1440×1080/59.94i).
- The Setup and PICTURE PROFILE menus cannot be operated during Rec Review.

## Assignable Buttons

The camcorder has eight assignable buttons *(page 11)* to which you can assign various functions for your convenience.

#### To change functions

Use "Assign Button" *(page 101)* in the OTHERS menu.
The assigned functions can be viewed on the Button/Remote status screen *(page 76)*.

## Interval Recording

The Interval Recording (time-lapse recording) function is especially effective for shooting objects that move very slowly.
The specified number of frames are automatically recorded at the specified intervals.

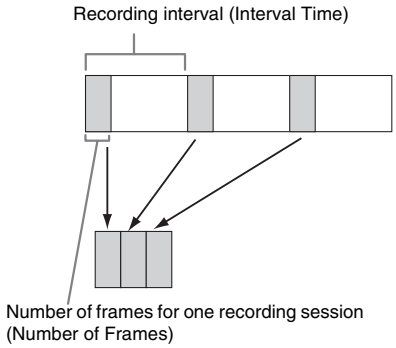


It is recommended to fix the camcorder to a tripod or equivalent and use the IR Remote Commander to start/stop recording rather than pressing the REC START/STOP button of the camcorder.

**Notes**

- Audio cannot be recorded in Interval Recording mode.
- Interval Recording cannot be set to "On" simultaneously with Frame Recording, Picture Cache Recording, Slow & Quick Motion, or Clip Continuous

Recording. When you set Interval Recording to "On," these other functions are forcibly set to "Off."
- Interval Recording mode cannot be used when "Format" in "System" *(page 102)* in the OTHERS menu is set to "HQ 1280×720/23.98P" (in UDF HD Mode), "XAVC-I 1080/23.98P" (in exFAT Mode), or "SP 1440×1080/23.98P" (in FAT HD Mode).
- Interval Recording mode cannot be used when the items "DVCAM" or "HDV" are set for "SDI/HDMI/i.LINK I/O Select" *(page 90)* in the VIDEO SET menu, and the video format of "Format" in "System" *(page 102)* in the OTHERS menu is set to other than "HQ mode/23.98P."

### Preparatory settings

Before starting Interval Recording, make the necessary settings in the CAMERA SET menu *(page 83)* in advance.

### Performing Interval Recording

When the preparatory settings are completed, you can start recording.

**Press the REC START/STOP button.**

**Notes**

- You cannot change the "Interval Time" and "Number of Frames" settings while Interval Recording is in progress. To change them, pause recording.
- After starting Interval Recording, Rec Review operation is disabled, even during an interval.
- The timecode is recorded in Rec Run mode *(page 96)* during Interval Recording.
- Some extra frames may be recorded if you stop recording or switch the card slot while recording is halted in Interval Recording mode.
- "Setting" for "Interval Rec" is automatically set to "Off" when you set the power switch to OFF, while the "Interval Time" and "Number of Frames" settings are maintained.

## Frame Recording

The Frame Recording function is especially effective for clay animation recording.
The specified number of frames are recorded intermittently when you press the REC START/STOP button.
It is recommended to fix the camcorder to a tripod or equivalent and use the IR Remote Commander to start/stop recording rather than pressing the REC START/STOP button of the camcorder.

**Notes**

- Audio cannot be recorded in Frame Recording mode.
- Frame Recording cannot be set to "On" simultaneously with Interval Recording, Picture Cache Recording, Slow & Quick Motion, or Clip Continuous Recording. When you set Frame Recording to "On," these other functions are forcibly set to "Off."
- Frame Recording mode cannot be used when "Format" in "System" *(page 102)* in the OTHERS menu is set to "HQ 1280×720/23.98P" (in UDF HD Mode), "XAVC-I 1080/23.98P" (in exFAT Mode), or "SP 1440×1080/23.98P" (in FAT HD Mode).
- Frame Recording mode cannot be used when the items "DVCAM" or "HDV" are set for "SDI/HDMI/i.LINK I/O Select" *(page 90)* in the VIDEO SET menu, and the video format of "Format" in "System" *(page 102)* in the OTHERS menu is set to other than "HQ mode/23.98P."

### Preparatory settings

Before starting Frame Recording, make the necessary settings in the CAMERA SET menu *(page 83)* in advance.

### Performing Frame Recording

When the preparatory settings are completed, you can start recording.

1. **Press the REC START/STOP button.**
   When the number of frames you specified with the menu are recorded, the camcorder automatically enters FRM STBY (Frame Rec Standby) status.
2. **Press the REC START/STOP button again.**
   Each time you press the REC START/STOP button, the camcorder records the specified number of frames then enters FRM STBY status.

**Notes**

- Recording cannot be stopped until the specified number of frames are recorded. If the power switch is set to OFF during recording, the power is only shut off after the specified number of frames are recorded.
- The Rec Review function cannot be used while recording in Frame Rec mode is in progress.
- You cannot change the "Number of Frames" setting while recording in Frame Rec mode is in progress. To change it, pause the recording.
- The timecode is recorded in Rec Run mode *(page 96)* during Frame Recording.
- Some extra frames may be recorded if you stop recording or switch the card slot while recording is paused in Frame Rec mode.
- "Setting" for "Frame Rec" is automatically set to "Off" when you set the power switch to OFF, while the "Number of Frames" setting is maintained.

## Clip Continuous Recording (UDF/ exFAT Only)

Clips are normally created individually for each time you start and stop recording, but you can also continue recording to a single clip regardless of the number of times you start and stop recording by using the Clip Continuous Recording function, which will add recordings to the same clip until the function is disabled or turned off.
This is convenient for when you do not want to create a large number of short clips, or when you do not want to be restricted by a maximum number of clips.
A recording start mark is added to each point at which you resume recording, making it easy to search for each point.

### Preparatory settings

Before starting Clip Continuous Recording, make the necessary settings to "Clip Cont. Rec" *(page 83)* in the CAMERA SET menu in advance.
When you set "Setting" to "On," the Clip Continuous Recording function is enabled, and "CONT" appears on the screen *(page 16)*.
You can also assign "Clip Cont. Rec" to an assignable button *(page 49)*, and set "Setting" to "On"/"Off" by pressing the button.

**Notes**

- Clip Continuous Recording cannot be set to "On" simultaneously with Picture Cache Recording, Interval Recording, Frame Recording, or Slow & Quick Motion. When you set Clip Continuous Recording to "On," these other functions are forcibly set to "Off."
- Clip Continuous Recording cannot be used while recording.
- This function cannot be used with FAT.

### Performing Clip Continuous Recording

When the preparatory settings are completed, you can start recording.

**Press the REC START/STOP button.**

When recording starts, the "CONT" indication on the screen changes to "●REC" (with ● in red).

**Notes**

- If you remove the SxS memory card or the battery while recording or standing by to record (the "CONT" indication appears), the SxS memory card must be restored. Only remove the SxS memory card after Clip Continuous Recording is complete. If "CONT" is flashing (1 time per second), you can remove the SxS memory card.
- Record for at least 2 seconds before you stop recording.

#### To disable Clip Continuous Recording mode

While standing by to record, set "Setting" in "Clip Cont. Rec" *(page 83)* in the CAMERA SET menu to "Off."

#### Restricted Operations

If you perform any of the following operations while recording or standing by to record, 1 continuous clip will not be created. The next time you start recording, a new clip will be created.

- Performing clip operations (locking, deleting, or changing the names of clips).
- Switching the memory card slot.
- Changing the recording format.
- Setting the power switch to OFF.
- Displaying the thumbnail screen.
- Playing clips.

## Picture Cache Recording: Retroactively Record

When the Picture Cache Recording function is active, the camcorder stores the last few seconds of video captured in the built-in cache memory to permit you to start recording video on an SxS memory card from a point before you press the REC START/STOP button. The maximum picture cache time is 15 seconds.

**Notes**

- Picture Cache Recording cannot be set to "On" simultaneously with Frame Recording, Interval Recording, Slow & Quick Motion, or Clip Continuous Recording. When you set Picture Cache Recording to "On," these functions are forcefully disabled.
- Picture Cache Recording mode cannot be used while recording, or while using Recording Review or Freeze Mix.
- Picture Cache Recording is set to "Off" when you change any of the settings in "System" *(page 102)* in the OTHERS menu.
- When Picture Cache Recording is "On," the time code is always recorded in Free Run mode regardless of the TC/UB SET menu settings *(page 96)*.
- When "OTHERS" > "System" > "F.Sys." is set to "exFAT," the Picture Cache time can be set up to 4 seconds.

## Preparatory settings

Before starting Picture Cache Recording, set "P.Cache Rec" *(page 83)* in the CAMERA SET menu.
"Setting" for Picture Cache Recording can also be set to "On"/"Off" by assigning it to an assignable button *(page 49)* and using that button.
When the setting has been made, the special recording/operation status indication block on the screen shows "●CACHE," with ● in green *(page 16)*.

## Performing Picture Cache Recording

**Press the REC START/STOP button.**

Recording begins, and stored video in the cache memory is written first to the SxS memory card. The on-screen "●CACHE" indication changes to "●REC" (● is red).

### To cancel the Picture Cache Recording function

Set "Setting" in "P.Cache Rec" in the CAMERA SET menu to "Off" or press the assignable button to which you assigned the Picture Cache function.

**Notes**

- If you change the recording format, the cached data are cleared and caching is newly started. Therefore, data cached before you changed the format cannot be recorded if you start Picture Cache Recording immediately after changing the format.
- If you start/stop Picture Cache Recording immediately after you insert an SxS memory card, data may not be recorded on the card.
- Picture caching starts when you activate the Picture Cache Recording function. Therefore, video before the function is activated cannot be recorded with Picture Cache Recording.
- Picture Cache Recording is invalid for external input signal (HDV).
- As picture caching is disabled while an SxS memory card is being accessed, such as during playback, Rec Review, or thumbnail screen display, Picture Cache Recording of such a period cannot be made.
- Although you can change the cache time setting while recording, any new value becomes valid only after recording has stopped.

# Slow & Quick Motion

When the camcorder is in UDF HD Mode. exFAT Mode, or FAT HD Mode and the video format *(page 103)* is set to one of the following settings, you can set the recording frame rate and playback frame rate to different values.

### NTSC Area

HD422 50/1080/29.97P, HD422 50/1080/23.98P, HD422 50/720/59.94P, HD422 50/720/29.97P, HD422 50/720/23.98P
XAVC-I 1080/29.97P, XAVC-I 1080/23.98P, XAVC-I 720/59.94P
HQ 1920×1080/29.97P, HQ 1920×1080/23.98P, HQ 1280×720/59.94P, HQ 1280×720/29.97P, HQ 1280×720/23.98P

### PAL Area

HD422 50/1080/25P, HD422 50/720/50P, HD422 50/720/25P
XAVC-I 1080/25P, XAVC-I 720/50P
HQ 1920×1080/25P, HQ 1280×720/50P, HQ 1280×720/25P

**Notes**

- Slow & Quick Motion recording cannot be used in SD Mode.
- Slow & Quick Motion cannot be set to "On" simultaneously with Frame Recording, Interval Recording, Picture Cache Recording, or Clip Continuous Recording. When you set Slow & Quick Motion to "On," these other functions are forcibly set to "Off."
- Slow & Quick Motion mode cannot be used while recording, or while using Recording Review or Freeze Mix.
- Slow & Quick Motion mode cannot be used when "SLS/EX SLS" *(page 81)* in the CAMERA SET menu is set to other than OFF.
- Audio cannot be recorded when the recording and playback frame rates differ.

## Preparatory settings

Before starting Slow & Quick Motion recording, make the necessary settings in advance.

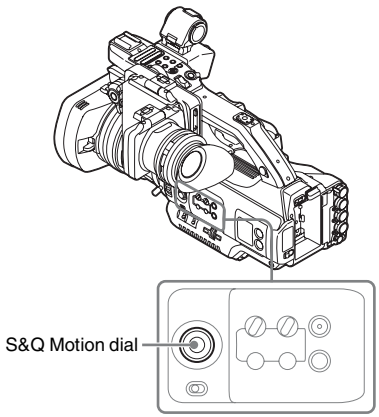

**1 Press the S&Q Motion dial.**

When the confirmation screen appears, select "Execute."
The camcorder enters the Slow & Quick Motion standby status.
The special recording mode indication on the screen shows "S&Q Motion" and "Recording frame rate"/"Playback frame rate" fps beneath.

**2 Set the frame rate for recording by turning the S&Q Motion dial.**

The setting range varies depending on the current video format *(page 85)*.

**When the RM-B170 Remote Control Unit is connected,** "S&Q Motion" of the CAMERA SET menu is activated, enabling the operation from the Remote Control Unit.

*For details, see "Operating the Slow & Quick Motion recording from the Remote Control Unit" on page 117.*

#### Setting the recording frame rate with the Direct menu

When the special recording mode indication on the screen is active, "Recording frame rate"/ "Playback frame rate fps" is displayed under "S&Q Motion."
You can change the recording frame rate with the Direct menu *(page 17)*.

### Recording in Slow & Quick Motion Mode

When the preparatory settings are completed, you can start recording.

**Press the REC START/STOP button.**

**Notes**

- You cannot change the Frame Rate settings while Slow & Quick Motion recording is in progress. To change them, pause the recording.
- The timecode is recorded in Rec Run mode during Slow & Quick Motion recording *(page 96)*.
- When recording at a low-speed frame rate, it may take time until recording stops after you press the REC START/STOP button.
- Slow & Quick Motion mode is automatically set to "Off" when you set the camcorder's power switch to OFF. However, the Frame Rate setting is saved.

## Freeze Mix: Image Alignment

In UDF HD Mode, exFAT Mode, or FAT HD Mode, an image (still picture) of a recorded clip can be temporarily superimposed on the current camera picture, permitting you to easily align images for your next recording.

### To use the Freeze Mix function

While standing by to record, assign the Freeze Mix function to one of the assignable buttons *(page 49)*.

### Superimposing a Freeze Mix image

While playing or reviewing images by pressing the REC REVIEW button, press the ASSIGN button to which you assigned "Freeze Mix" at the image with which you want to align. The image is displayed as a still picture over the current camera picture.

### Canceling Freeze Mix status

You can cancel it with the ASSIGN button to which you assigned "Freeze Mix" or the REC START/STOP button.
When you cancel Freeze Mix status by pressing the ASSIGN button, the normal camera picture is displayed.
When you cancel Freeze Mix status by pressing the REC START/STOP button, normal recording begins.

**Notes**

- The Freeze Mix function cannot be used in SD Mode.
- Freeze Mix cannot be used when "Format" in "System" *(page 102)* in the OTHERS menu is set to "HQ 1280×720/23.98P" (in UDF HD Mode), "XAVC-I 1080/23.98P" (in exFAT Mode), or "SP 1440×1080/ 23.98P" (in FAT HD Mode).
- If the "Format" setting of the recorded picture and the current camera picture differ, the Freeze Mix display cannot be achieved.
- The Freeze Mix display cannot be obtained in Slow & Quick Motion mode or Slow Shutter mode.
- You cannot operate the Setup menus and PICTURE PROFILE menu in Freeze Mix status.

## Picture Profiles

You can customize the picture quality, depending on the conditions or circumstances of recording, and store settings as a picture profile, enabling you to recall the profile as necessary.
Six different picture profiles (PP1 to PP6) can be stored in memory.
The same standard (reference) values are registered to six picture profiles at the factory as those specified for the Picture Profile Off status.

**Note**

Picture profiles can be set while recording or standing by to record. They cannot be operated from the thumbnail screen.

### Registering the customized settings as a Picture Profile

1. **Set the power switch *(page 9)* to ON to turn on the camcorder.**
2. **Press the PICTURE PROFILE button *(page 11)*.**
   The PICTURE PROFILE menu is displayed.
3. **Using the joystick or the jog dial, select "SEL," then press the SEL/SET button or the jog dial.**
4. **Select the number of the picture profile to register from the list, then press the SEL/SET button or the jog dial.**
5. **Use the joystick or the jog dial to select "SET," then press the SEL/SET button or the jog dial.**
6. **Make each setting *(page 55)*.**
7. **When the settings have been made, press the PICTURE PROFILE button.**

### Selecting a registered Picture Profile

Once you store a picture profile, you can recall the picture quality registered in the picture profile.

1. **While standing by to record, press the PICTURE PROFILE button *(page 11)*.**
   The PICTURE PROFILE menu is displayed.
2. **Using the joystick or the jog dial, select "SEL," then press the SEL/SET button or the jog dial.**
3. **Select the number of the picture profile to use from the list, then press the SEL/SET button or the jog dial.**
   If OFF is selected, the picture quality is set to standard and cannot be changed.
4. **Press the PICTURE PROFILE button.**

The picture profile being selected is displayed when you set the DISPLAY switch *(page 16)* to ON. You can also select picture profiles with the Direct menu *(page 17)*.

## Picture Profile Items

The values when “Off” is selected at “SEL” of the PICTURE PROFILE menu are shown in bold face (example: **Standard**).

| PICTURE PROFILE SET | | |
|---|---|---|
| **Items** | **Subitems and setting values** | **Contents** |
| **Profile Name**<br>Changing the picture profile name | Profile name<br>**Standard** | Set the profile name in 8 characters at maximum. You can use upper- and lowercase alphabetics, numerics 0 to 9, - (hyphen), _ (underscore) and space. |
| **Matrix**<br>Adjusting the color phase over the entire area with matrix operations | Setting<br>**On** / Off | Set to “On” to activate the color phase adjustment function with matrix operations for the entire picture.<br>**Notes**<br>• When this function is set to “Off,” Multi Matrix is also set to “Off” in synchronization.<br>• If color saturation occurs under lighting that contains excessive blue components (such as blue LED lighting), set the “Setting” of “Matrix” to “Off” to reduce the color saturation. |
| | Select<br>1 / **2** / 3 / 4 / 5 / 6 | Select the built-in preset matrix provided for convenience.<br>1: Equivalent to SMPTE-240M / 2: Equivalent to ITU-709 / 3: Equivalent to SMPTE WIDE / 4: Equivalent to NTSC / 5: Equivalent to EBU / 6: Equivalent to PAL |
| | Level<br>–99 to +99 (±**0**) | Adjust the color saturation for the entire picture area. |
| | Phase<br>–99 to +99 (±**0**) | Adjust the hue for the entire picture area. |
| | R-G, R-B, G-R, G-B, B-R, B-G<br>–99 to +99 (±**0**) | Finely adjust the color phase for the entire picture area by independently setting each of the factors. |
| **Multi Matrix mode**<br>Selecting multi-matrix correction and color phase adjustment for the specified area | Multi Matrix / **Color Correction** | Select the setting items of the Multi Matrix or the setting items of the Color Correction. |

| PICTURE PROFILE SET | | |
|---|---|---|
| **Items** | **Subitems and setting values** | **Contents** |
| **Multi Matrix**<br>Makes settings related to multi-matrix correction. (Unselectable when "Color Correction" is selected in the Multi Matrix mode) | Setting<br>On / **Off** | Set to "On" to enable the multi-matrix correction, which allows specific colors to be selected for saturation correction in a 16-axis hue space. |
| | Area Indication[1)]<br>On / **Off** | Set to "On" to display a zebra pattern in the areas of the specified color for multi-matrix correction. |
| | Color Detection[2)]<br>Execute/Cancel | Execute to detect the target color on the screen for multi-matrix correction. |
| | Axis<br>**B** / B+ /MG- / MG / MG+ / R / R+ / YL- / YL /YL+ / G- / G / G+ / CY / CY+ / B- | Specify a color targeted by multi-matrix correction (16-axis mode). |
| | Hue<br>–99 to +99 (±**0**) | Set the the hue of the color targeted by multi-matrix correction for each 16-axis mode. |
| | Saturation<br>–99 to +99 (±**0**) | Adjust the saturation of the color targeted by multi-matrix correction for each 16-axis mode. |
| **Color Correction**<br>Adjusting the color phase in a specific area (Unselectable when "Multi Matrix" is selected in the Multi Matrix mode) | Setting<br>On / **Off** | Set to "On" to enable the color phase adjustment for a specific area. (Simultaneous adjustment of multiple areas is not allowed. You can adjust it for one area only.) |
| | Area Detection[2)]<br>Execute/Cancel | Execute to detect the color in the center of the screen. The area centering around the detected color of the range specified by "Target Width" becomes the target area of Color Correction. |
| | Area Indication[1)]<br>On / **Off** | Set to "On" to display the Zebra 1 pattern for the area targeted for Color Correction.<br>**Note**<br>The area where the Zebra 1 pattern is displayed and the area targeted for Color Correction, may differ. |
| | Target Phase<br>0 to 359 (**130**) | Manually adjust the center color for the area targeted for Color Correction.<br>**Note**<br>When Area Detection is executed, this setting is overwritten by the Area Detection result. Perform fine adjustment with this item as required. |
| | Target Width<br>0 to 90 (**40**) | Set the width of color phase for the area targeted for Color Correction. |
| | Level<br>–99 to +99 (±**0**) | Set the saturation for the color in the target area. |
| | Phase<br>–99 to +99 (±**0**) | Adjust the hue for the color in the target area. |

| PICTURE PROFILE SET | | |
|---|---|---|
| **Items** | **Subitems and setting values** | **Contents** |
| **White**<br>Setting the white balance offset and the color temperature of the preset white | Offset White<br>On / **Off** | Set to "On" to shift the conversion value for auto white balance in Memory A or B mode and that for auto tracing white in ATW mode to a lower color temperature or a higher color temperature. |
| | Offset<A><br>–99 to +99 (±**0**) | Adjust the volume of the offset white (shifting volumes) of the conversion value in Memory A, Memory B, or ATW mode, respectively. |
| | Offset<B><br>–99 to +99 (±**0**) | |
| | Offset<ATW><br>–99 to +99 (±**0**) | |
| | Preset White<br>2100 to 10000 (**3200**) | Adjust the preset color temperature when Preset white balance mode is selected in steps of 100K.<br>**Notes**<br>• Except when the white balance is in Memory A or B mode or when ATW is active, you cannot confirm the result of changing the Offset White and Offset settings on the screen.<br>• Except when Preset white balance mode is selected, you cannot confirm the result of changing the Preset White settings on the screen. |
| **HD Detail**<br>Adjusting the details to be applied to the picture in HD Mode | Setting<br>**On** / Off | Set to "On" to apply the details to the video signal. |
| | Level<br>–99 to +99 (±**0**) | Adjust the detail level. |
| | Frequency<br>–99 to +99 (±**0**) | Set the center frequency of the details.<br>Setting the center frequency higher decreases the details, and setting it lower increases the details. |
| | Crispening<br>–99 to +99 (±**0**) | Adjust the noise-suppression level.<br>When you set it to a higher level, less noise may be seen, as fine elements of details are deleted leaving only high-level elements.<br>When you set it to a lower level, fine elements are applied while increasing noise. |
| | H/V Ratio<br>–99 to +99 (±**0**) | Adjust the horizontal-to-vertical ratio of detail elements.<br>A higher value makes the vertical elements increased with respect to the horizontal elements. |
| | White Limiter<br>–99 to +99 (±**0**) | Limit the white details. |
| | Black Limiter<br>–99 to +99 (±**0**) | Limit the black details. |
| | V DTL Creation<br>NAM / Y / G / **G+R** | Select the source signal to generate vertical details from among NAM (G or R whichever is higher), Y, G, and G+R. |
| | Knee APT Level<br>–99 to +99 (±**0**) | Adjust the knee aperture level (level of details to be applied to the sections above the knee point). |

| PICTURE PROFILE SET | | |
|---|---|---|
| **Items** | **Subitems and setting values** | **Contents** |
| **SD Detail**<br>Adjusting the details to be applied to the picture in SD Mode | Setting<br>**On** / Off | Set to "On" to apply the details to the video signal. |
| | Level<br>–99 to +99 (±**0**) | Adjust the detail level. |
| | Frequency<br>–99 to +99 (±**0**) | Set the center frequency of the details.<br>Setting the center frequency higher decreases the details, and setting it lower increases the details. |
| | Crispening<br>–99 to +99 (±**0**) | Adjust the noise-suppression level.<br>When you set it to a higher level, less noise may be seen, as fine elements of details are deleted leaving only high-level elements.<br>When you set it to a lower level, fine elements are applied while increasing noise. |
| | H/V Ratio<br>–99 to +99 (±**0**) | Adjust the horizontal-to-vertical ratio of detail elements.<br>A higher value makes the vertical elements increased with respect to the horizontal elements. |
| | White Limiter<br>–99 to +99 (±**0**) | Limit the white details. |
| | Black Limiter<br>–99 to +99 (±**0**) | Limit the black details. |
| | V DTL Creation<br>NAM / **Y** / G / G+R | Select the source signal to generate vertical details from among NAM (G or R whichever is higher), Y, G, and G+R. |
| | Knee APT Level<br>–99 to +99 (±**0**) | Adjust the knee aperture level (level of details to be applied to the sections above the knee point). |
| **Skin Tone Detail**<br>Adjusting the details to be applied to the areas of a specific color phase | Setting<br>On / **Off** | Set to "On" to enable the detail level adjustment for specific color-phase areas.<br>The detail level is uniform over the entire picture with the Off setting. |
| | Level<br>–99 to +99 (±**0**) | Adjust the skin-tone detail level. |
| | Area Detection[2)]<br>Execute/Cancel | Select "Execute" to detect the color in the center of the screen. The area centering on the detected color becomes the target area for Skin Tone Detail control. |
| | Area Indication[1)]<br>On / **Off** | Set to "On" to display the Zebra 1 pattern for the target area for Skin Tone Detail control. |
| | Saturation<br>–99 to +99 (±**0**) | Adjust the color (saturation) level for Skin Tone Detail control.<br>**Note**<br>When Area Detection is executed, this setting is automatically returned to 0. |
| | Phase<br>0 to 359 (**130**) | Adjust the center color-phase value for the target area for Skin Tone Detail control.<br>**Note**<br>When Area Detection is executed, this setting is automatically changed to the value equivalent to that of the detected color. |

| PICTURE PROFILE SET | | |
|---|---|---|
| **Items** | **Subitems and setting values** | **Contents** |
| | Width<br>0 to 90 (**40**) | Adjust the width of the color phase of the target area for Skin Tone Detail control.<br>**Note**<br>When Area Detection is executed, the Width setting automatically returns to 40. |
| **Aperture**<br>Making settings related to aperture correction | Setting<br>**On** / Off | Set to "On" to enable aperture correction (processing to improve resolution by adding high-frequency aperture signals to the video signal, which corrects degeneration due to high-frequency characteristics). |
| | Level<br>–99 to +99 (±**0**) | Select the level for the aperture correction. |
| **Knee**<br>Adjusting the knee level | Setting<br>**On** / Off | Set to "On" to compress the high-luminance area of the picture.<br>**Notes**<br>Knee is fixed and cannot be changed in the following cases:<br>• When Gamma is set to HG1 to 4<br>• When the electronic shutter is in slow shutter mode<br>• When EX SLS is active |
| | Auto Knee<br>**On** / Off | Set to "On" to automatically set the best knee conditions according to the luminance level of the picture.<br>With "Off" the knee conditions can be manually adjusted independently of the luminance level of the picture. |
| | Point<br>50 to 109 (**90**) | Set the knee point when Auto Knee is "Off." |
| | Slope<br>–99 to +99 (±**0**) | Set the knee slope (volume of compression) when Auto Knee is "Off." |
| | Knee SAT<br>**On** / Off | Set to "On" to enable the knee saturation adjustment (level for the area over the knee point). |
| | Knee SAT Level<br>–99 to +99 (±**0**) | Adjust the knee saturation level for the area over the knee point. |
| **White Clip** | Setting<br>**On** / Off | Turns white clipping adjustment on or off. |
| | Level<br>Except for [PAL Area], the level is selected for Country<br>90.0%~109.0% (**108.0%**) in [PAL Area], the level is selected for Country<br>90.0%~109.0% (**105.0%**) | Specifies the white clip level. |
| **Gamma**<br>Adjusting the gamma compensation level and selecting the gamma curve | Level<br>–99 to +99 (±**0**) | Adjust the gamma compensation level. |
| | Select[3)]<br>STD1 to STD6 / HG1 to HG4<br>(HD: **STD5**, SD: **STD4**) | Select the type of reference curve for gamma compensation. |

| PICTURE PROFILE SET | | |
|---|---|---|
| **Items** | **Subitems and setting values** | **Contents** |
| **Black**<br>Adjusting the black | –99 to +99 (±**0**) | Adjust the master black level. |
| **Black Gamma**<br>Adjusting the black gamma level | –99 to +99 (HD: **±0**, SD: **-16**) | Adjust the level of black gamma function that emphasizes only the dark areas of the picture to clear the tones or on the contrary de-emphasizes it to reduce noise. |
| **Low Key SAT**<br>Adjusting the low key saturation | –99 to +99 (±**0**) | Adjust the level of the low key saturation to heighten the colors only in the dark areas of the picture or pale them to reduce noise. |
| **Copy**<br>Copying a picture profile | Execute / Cancel | Select "Execute" to copy. |
| **PP Data**<br>Writing/loading a picture profile | Store<br>Execute / Cancel | Select "Execute" to store a picture profile on an SxS memory card. |
| | Recall<br>Execute / Cancel | Select "Execute" to load a picture profile from an SxS memory card. |
| **Reset**<br>Resetting a picture profile | Execute / Cancel | Select "Execute" to reset. |

*1)* The Area Indication "On"/"Off" setting is common to all picture profiles PP1 to PP6.

*2)* To execute "Color Detection" or "Area Detection"

1. **Select "Color Detection" or "Area Detection."**
   A square marker that indicates the detection area appears in the center of the screen, and "Execute" and "Cancel" are displayed below.
2. **Select "Execute."**
   Color-phase detection in the marker area is performed.
   When detection successfully ends, a completion message is displayed then the screen is restored.
   With Multi Matrix, the target color of multi-matrix correction is changed to the color detected by "Color Detection," and the Area Indication (zebra pattern) appears on the screen.
   With Skin Tone Detail, the target area for the adjustment is changed to the area centering around the color detected by "Area Detection," and the Area Indication (zebra pattern) appears on the screen.
   If detection fails, an error message appears, then the previous screen is restored.

*3)* Available gamma curves from "Select" in "Gamma" (STD: Standard gamma, HG: Hyper gamma)

STD1: A gamma table equivalent to an SD camcorder.
STD2: A gamma table with ×4.5 gain.
STD3: A gamma table with ×3.5 gain.
STD4: A gamma table equivalent to the SMPTE-240M standard.
STD5: A gamma table equivalent to the ITU-R709 standard.
STD6: A gamma table with ×5.0 gain.
HG1: A gamma table for turning 325% D-range input into 100% output.
HG2: A gamma table for turning 460% D-range input into 100% output.
HG3: A gamma table for turning 325% D-range input into 109% output.
HG4: A gamma table for turning 460% D-range input into 109% output.

## Deleting Clips

While standing by to record, the Last Clip DEL function for deleting the last recorded clip and the All Clips DEL function for deleting all clips from an SxS memory card are available.

*For clip deletion on the thumbnail screen, see "Deleting Clips" on page 72.*

### To delete using the assignable button

Assign the Last Clip DEL function to one of the assignable buttons *(page 49)* in advance.
Press the assignable button to which you have assigned "Last Clip DEL," and select "Execute" to delete the last recorded clip from the SxS memory card.

### To delete using the Setup menu

Select "Last Clip DEL" in "Clip" *(page 104)* in the OTHERS menu, select "Execute," then select "Execute" again to delete the last recorded clip from the SxS memory card.

**Note**

When Clip Continuous Recording is set to "On," "Last Clip DEL" cannot be selected.

### Deleting clips collectively

Select "All Clips DEL" in "Clip" *(page 104)* in the OTHERS menu, select "Execute," then select "Execute" again to delete all the clips from the SxS memory card.

**Notes**

- If the SxS memory card contains clips of both of HD Mode and SD Mode, only the clips of the currently selected mode are deleted.
- Clips with the OK mark *(page 48)* cannot be deleted if FAT is selected for the file system. If UDF/exFAT is selected, clips set to "Lock Clip" *(page 69)* cannot be deleted.

## Storing/Retrieving the Setting Data

You can store all the menu settings (including picture profiles) as a setup file on an SxS memory card or a USB flash drive.
By retrieving the stored setup file, the proper setup condition can be immediately obtained.

**Note**

Values for "Clock Set" and "Hours Meter" in the OTHERS menu are not stored.

### Storing the Setup file

#### To use an SxS memory card

Only one setup file—designated with the file name "SETUP.SUF"—can be stored on one SxS memory card.

**1 Insert a memory card on which you wish to store the setup file to a card slot.**

Check that the corresponding memory card icon is displayed on the screen. If a memory card in the other slot is selected, press the SLOT SELECT button to switch.

**2 Select "Store" in "Camera Data" *(page 100)* in the OTHERS menu, then select "Execute."**

An in-progress message is displayed during writing. When writing is completed, a completion message is displayed.

**Notes**

- If a setup file already exists on the memory card you specified in Step 1, a message to confirm whether to overwrite the file is displayed.
- If there is not sufficient space on the memory card, an error message is displayed.

#### To use a USB flash drive (in UDF/exFAT mode)

Select "USB A" in "RM/USB A Sel" *(page 108)* in the OTHERS menu, then connect the formatted USB flash drive to the USB connector (type A) *(page 34)*.

**Notes**

- No signal can output from the VIDEO connector in this setting.
- The character information cannot be output regardless of the "SDI/HDMI/Video Out Super" setting.

Select "All Save(USB)" >"Execute" in step 2.

## Retrieving the Setup file

### To use an SxS memory card

When you retrieve the stored setup file, the camcorder settings are changed according to the file.

**1 Insert the memory card on which you stored the setup file into a card slot.**

Check that the corresponding memory card icon is displayed on the screen. If a memory card in the other slot is selected, press the SLOT SELECT button to switch.

**2 Select "Recall" in "Camera Data" *(page 100)* in the OTHERS menu, then select "Execute."**

An in-progress message is displayed during data reading. When the read-out is completed, a completion message is displayed, indicating that the camcorder settings have been changed according to the setup file.

### To use a USB flash drive (in UDF/exFAT mode)

Connect the formatted USB flash drive to the USB connector (type A) *(page 34)*.
Select "All Save(USB)" > "Execute" in step 2.

## Resetting to the standard values

The current camcorder settings you made through various menu and button operations can be collectively returned to the standard statuses (factory settings) by executing "All Reset" in the OTHERS menu.

# Planning Metadata

Planning metadata is information about shooting and recording plans, recorded in an XML file.

### Example of a planning metadata file

```
<?xmlspversion="1.0"spencoding="UTF-8"?>

<PlanningMetadata
xmlns="http://xmlns.sony.net/pro/metadata/planningmetadata"
assignId="P0001" creationDate="2011-08-20T17:00:00+09:00"
lastUpdate="2011-09-28T10:30:00+09:00" load="false" version="1.00">

<Propertiesspropertyid="assignment" update="2011-08-20T09:00:00+09:00"
modifiedBy="Chris">

<TitlespusAscii="Typhoon" xml:lang="ja">Typhoon_Strikes_Tokyo</Title>

</Properties>

</PlanningMetadata>
```

You can shoot using clip names and shot mark names defined in advance in a planning metadata file.
This camcorder can display clip names and shot mark names defined in the following languages:

- English
- Chinese
- German
- French
- Italian
- Spanish
- Dutch
- Portuguese
- Swedish
- Norwegian
- Danish
- Finnish

**Notes**

- If you define clip and shot mark names in languages other than those listed above, they may not be displayed on the viewfinder screen.
- If you define clip and shot mark names in French, Dutch, or Finnish, some characters are displayed in a different but similar font.

## Loading a Planning Metadata file

To record planning metadata together with clips, it is necessary to load a planning metadata file into the camcorder's memory in advance.

### To use an SxS memory card

Insert the SxS memory card with the planning metadata file (.xml) saved to the directory below into the camcorder's card slot, then select and load the file via "Load / Slot(A)" or "Load /

Slot(B)" in "Plan.Metadata" *(page 105)* in the OTHERS menu.
UDF: General\Sony\Planning
exFAT: XDROOT\General\Sony\Planning
FAT: BPAV\General\Sony\Planning

#### To use a USB flash drive (in UDF/exFAT mode)

Before operation, select "USB A" in "RM/USB A Sel" of the OTHERS menu.

**Notes**

- No signal can output from the VIDEO connector in this setting.
- The character information cannot be output regardless of the "SDI/HDMI/Video Out Super" setting.

**1 Connect a USB flash drive formatted with the FAT32 file system to the USB connector (type A) *(page 34)*.**

A file list appears.

**Note**

The file list displays up to 64 files.
Even if the total number of planning metadata files is 64 or less, all of the planning metadata files may not appear if the directory where they are located on the USB flash drive (General/Sony/Planning) contains 512 or more files.

**2 Using the joystick or the jog dial, select the file which you want to load in the file list, then press the SEL/SET button or the jog dial.**

#### Confirming the detailed information in planning metadata

After loading a planning metadata file into memory of the camcorder, you can check the details of the file, such as the filename, time and date of file creation, and the titles specified in the file.
Select "Properties" in "Plan.Metadata" *(page 105)* in the OTHERS menu, then select "Execute."

#### Using the Wi-Fi connection

When connecting the unit with a computer via Wi-Fi, the file transmission can be done accessing the unit's Web menu from a computer.

**1 Launch the browser and input http://<camcorder's IP address> *(page 106)* in the address bar.**

**Example: When the IP address is 192.168.1.10, input http://192.168.1.10 in the address bar.**

**2 Input the user name and password, then click OK.**

User name: admin
Password: (your unit's model in lowercase; pmw-300)

#### Clearing the loaded planning metadata

To clear the planning data loaded in the camcorder's memory, proceed as follows:
Select "Clear" in "Plan.Metadata" *(page 105)* in the OTHERS menu, then select "Execute."

## Defining a clip name in Planning Metadata

The following two types of clip name strings can be written in a planning metadata file.

- ASCII-format name, which is displayed on the viewfinder screen
- UTF-8-format name, which is actually registered as the clip name

You can select the type for displaying the clip name with "Clip Name Disp" in "Plan.Metadata" *(page 105)* in the OTHERS menu.
When you specify a clip name in planning metadata, the name is displayed under the operation status indication on the viewfinder screen.

#### Example of clip name strings

Use a text editor to modify the description for the <Title> tag.
The shaded fields in the example are clip name strings. "Typhoon" is described in ASCII format (up to 44 characters).
"Typhoon_Strikes_Tokyo" is described in UTF-8 format (up to 44 bytes).
Here, "sp" indicates a space, and ↵ indicates a carriage return.

```
<?xml_sp version="1.0"_sp encoding="
UTF-8"?>↵
 <PlanningMetadata_sp xmlns="http://
xmlns.sony.net/pro/metadata/
planningmetadata"_sp assignId="
P0001"_sp creationDate="
2011-08-20T17:00:00+09:00"_sp
lastUpdate="
2011-09-28T10:30:00+09:00"_sp
version="1.00">↵
    <Properties_sp propertyId="
    assignment"_sp update="
    2011-09-28T10:30:00+09:00"_sp
```

```
    modifiedBy="Chris">↵
        <Title sp usAscii="Typhoon" sp
        xml:lang="en">Typhoon_Strikes_Tokyo
        </Title>↵
    </Properties>↵
</PlanningMetadata>↵
```

**Notes**

- When you create a file, enter each statement as a single line by breaking a line with a CRLF only after the last character of the line, and do not enter spaces except where specified with "sp."
- A string of up to 44 bytes (or 44 characters) is valid as a clip name. If a UTF-8-format string exceeds 44 bytes, the string up to the 44th byte is used as the clip name. If only a string in ASCII format is specified, the ASCII-format name up to the 44th characters is used as the clip name. When neither the ASCII-format name string nor UTF-8-format name string is valid, a clip name in the standard format is used.

### Using a clip name defined in planning metadata

Load a planning metadata file that contains the clip name into memory of the camcorder, then select "Plan" in "Auto Naming" in "Clip" *(page 104)* in the OTHERS menu.

Clip names are generated by adding an underscore (_) and a 5-digit serial number (00001 to 99999).

**Example:** Typhoon_Strikes_Tokyo_00001, Typhoon_Strikes_Tokyo_00002, ...

**Notes**

- If the serial number reaches 99999, it returns to 00001 upon the next recording.
- When you load another planning metadata file, the 5-digit serial number returns to 00001.

## Defining Shot Mark names in Planning Metadata

When you record shot mark 1 or shot mark 2, you can apply a name to the shot mark, using a string defined in planning metadata.

### Example of shot mark name strings

Use a text editor to modify the description for the <Meta name> tag.

The shaded fields in the example are shot mark name strings.

Names can be either in ASCII format (up to 32 characters) or UTF-8 format (up to 16 characters).

Here, "sp" indicates a space and ↵ indicates a carriage return.

**Note**

If a name string contains even one non-ASCII character, the maximum length of that string is limited to 16 characters.

```
<?xml sp version="1.0" sp encoding="
UTF-8"?>↵
<PlanningMetadata xmlns="http://
xmlns.sony.net/pro/metadata/
planningmetadata" sp assignId="
H00123" sp creationDate="
2011-04-15T08:00:00Z" sp lastUpdate="
2011-04-15T15:00:00Z" sp version=
"1.00">↵
 <Properties sp propertyId=
"assignment" sp class="original" sp
update="2011-04-15T15:00:00Z" sp
modifiedBy="Chris">↵
    <Title sp usAscii="Football
    Game" sp xml:lang="en">
    Football Game 15/04/2011
    </Title>↵
        <Meta sp name="_ShotMark1" sp
        content="Goal"/>↵
        <Meta sp name="_ShotMark2" sp
        content="Shoot"/>↵
    </Properties>↵
</PlanningMetadata>↵
```

**Note**

When you create a file, enter each statement as a single line by breaking a line with a CRLF only after the last character of the line, and do not enter spaces except where specified with "sp," except within shot mark name strings.

## Copying Planning Metadata files collectively

You can copy planning metadata files stored in the General folder on an SxS memory card collectively to another SxS memory card.

Select "General Files" in "Copy All" *(page 105)* in the OTHERS menu.

# Thumbnail Screens

When you press the THUMBNAIL button *(page 11)*, clips recorded on the SxS memory card are displayed as thumbnails on the screen. If no clips are recorded on the card, a no-clip message is displayed. You can start playback from the clip selected on the thumbnail screen. The playback picture can be seen on the viewfinder screen and external monitors.
Press the STOP/CAM button *(page 11)* to exit the thumbnail screen and return to the recording screen.

**Note**

Even if the SxS memory card contains a mixture of HD and SD clips, the normal thumbnail screen shows only clips of the mode selected in "HD/SD" in "System" *(page 102)* in the OTHERS menu.
To display all recorded clips regardless of the HD/SD Mode, switch the screen to the All-Clip thumbnail screen *(page 66)*.

## Configuration of the Thumbnail Screen

Data for the clip selected with the cursor are displayed at the bottom of the screen.



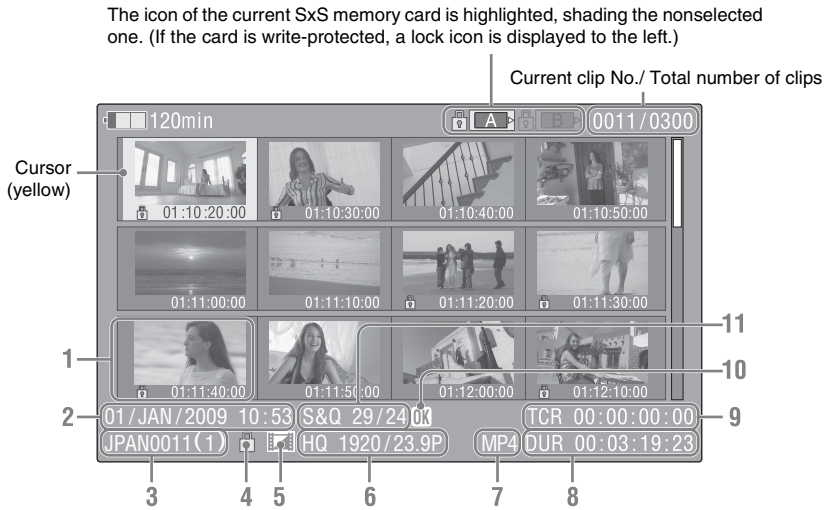


1. **Thumbnail**
   In UDF, exFAT, and FAT HD Mode: The thumbnail image for each clip is an index frame from the clip. When recording, the first frame of a clip is automatically set as the index frame. This frame can be adjusted *(page 74)*. Below each thumbnail, the timecode of the representative picture is displayed. If the clip is locked or is set with an OK mark, the lock mark is displayed.
   In FAT SD mode: The thumbnail image for each clip is the first frame of the clip. Below each thumbnail, the timecode of the representative picture is displayed. If the file was split into multiple parts because its file size exceeded 2 GB, the take mark is displayed. Split files can be viewed via the EXPAND CLIP screen *(page 72)*.
2. **Date and starting time of recording**
3. **Clip name**
   In FAT SD Mode, if the file was split into multiple parts because its file size exceeded 2 GB, the segment number is displayed after the name, separated with a slash.

4. **Lock mark (UDF, exFAT, and FAT HD Mode only)**
   UDF, exFAT: A lock mark appears if the selected clip is locked.
   FAT HD Mode: A lock mark appears if the selected clip has an OK mark.
5. **AV independent file icon (UDF, exFAT, and FAT HD Mode only)**
   Displayed only if the selected clip is an AV independent file. This indicates that not all operations and indications may be available, because the clip may have been added manually to the SxS file via a computer, etc., and there is no management file for it.
6. **Recording video format**
7. **File format**
   The file format (MXF, MP4, AVI) of the selected clip is displayed. (This item is not indicated when the recording mode is UDF-HD mode.)
8. **Duration of the clip**
9. **Timecode**
   The timecode of the index frame is displayed.
10. **OK/NG/KP mark (UDF, exFAT, and FAT HD Mode only)**
    UDF, exFAT: The mark is displayed if the selected clip has an OK/NG/KP flag.
    FAT HD Mode: The OK mark is displayed if the selected clip has an OK mark.
11. **Special recording information (UDF, exFAT, and FAT HD Mode only)**
    If the selected clip was recorded in a special recording mode (Slow & Quick Motion, Interval Recording, or Frame Recording), the mode is displayed.
    Clips recorded in Slow & Quick Motion display the "Recording frame rate/playback frame rate fps" to the right.

## Changing the Type of Thumbnail Screen

The type of thumbnail screen can be changed as follows by pressing the THUMBNAIL button *(page 11)*.

### UDF, exFAT

The normal thumbnail screen, OK/NG/KP/None clip thumbnail screen, and All-Clip thumbnail screen are cyclically displayed.

### FAT HD Mode

The normal thumbnail screen, OK clip thumbnail screen, and All-Clip thumbnail screen are cyclically displayed.

### FAT SD Mode

The normal thumbnail screen and All-Clip thumbnail screen are alternately displayed.

### OK/NG/KP/None-Clip thumbnail screen

Only the clips flagged OK/NG/KP—or clips with no flag ("None")—among the clips on the current SxS memory card are displayed.
You can select the type of flag to display with "Filter Clips" in "Clip" *(page 104)* in the OTHERS menu.

### OK-Clip thumbnail screen

Only the clips marked OK among the clips on the current SxS memory card are displayed.

### All-Clip thumbnail screen

The All-Clip thumbnail screen shows all clips on the current SxS memory card regardless of the HD or SD Mode, permitting you to check whether the card contains any clips of another mode than that currently selected.

**Note**

You cannot start playback from the All-Clip thumbnail screen.
Press the THUMBNAIL button again to return to the normal thumbnail screen, and playback and clip operations are enabled.

### Switching the SxS memory cards

When two memory cards are loaded, press the SLOT SELECT button *(page 12)* to switch memory cards.

**Note**

Card switching is enabled only when the thumbnail screen is displayed or when an external input picture is displayed by pressing the STOP/CAM button.
You cannot switch memory cards during playback.
Continuous playback of cards in slots A and B is not possible.

# Playing Clips

For playback operations, use the playback control buttons on the handle *(page 11)*. When the IR Remote Commander is enabled, you can use its playback control buttons instead *(page 29)*.

## Playing the Selected and Subsequent Clips in Sequence

**1 Using the joystick or the jog dial, move the cursor to the thumbnail image of the clip with which you wish to start playback.**

**2 Press the PLAY/PAUSE button.**

Playback starts from the beginning of the selected clip.

**Notes**

- The playback picture may be momentarily distorted or frozen between clips. The playback control buttons and THUMBNAIL button do not function during this condition.
- When you select a clip on the thumbnail screen and start playback, the playback picture at the beginning of the clip may be distorted. To start playback without distortion, once pause playback after starting it, press the PREV button to return to the top of the clip, then restart playback.

## Information displayed on the playback screen

The following information is superimposed on the playback picture.

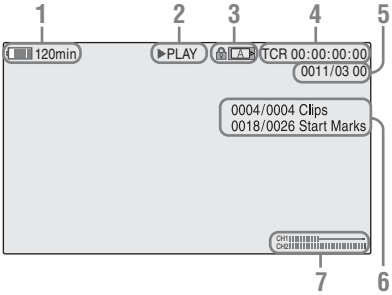


1. **Battery remaining/DC IN voltage**
2. **Playback mode**
3. **SxS memory card**
   A 🔒 mark appears to the left if the SxS memory card is write-protected.
4. **Time data**
   The time data for the playback picture are displayed. Each time you press the DURATION/TC/U-BIT button, the indication is switched between timecode (TCR) and user-bit (UB) data.
5. **Clip no./total number of clips**
   This is displayed for FAT. It is also displayed for UDF/exFAT if "Find Mode" in "Clip" *(page 104)* in the OTHERS menu is set to "Clip."
6. **Clip no./total number of clips, essence mark no./total number of essence marks**
   This is displayed for UDF/exFAT if "Find Mode" in "Clip" *(page 104)* in the OTHERS menu is set to "Rec Start."
7. **Audio levels**
   The audio levels for the recording are displayed.

## Monitoring Audio

In Normal playback mode, you can monitor the recorded audio signals through the built-in speaker *(page 11)* or connected headphones.
With the headphones connected to the headphone connector *(page 9)*, the built-in speaker is turned off.
Press the VOLUME buttons *(page 11)* to adjust the sound volume.
You can select audio channel(s) to be monitored with "Audio Output" *(page 89)* in the AUDIO SET menu.

## Cueing Up

### To start playback from the top of the first clip

Press the PREV button and F REV button simultaneously. The top of the first-recorded clip on the memory card is cued up.

### To display the last frame of the last-recorded clip

Press the F FWD button and NEXT button simultaneously. The last frame of the last-recorded clip on the SxS memory card is displayed.

## Adding Shot Marks During Playback (UDF/exFAT/FAT HD Mode)

In the same manner as in recording, you can add shot marks to the clip during playback.

**At the point where you wish to add a shot mark, press the "Shot Mark1" or "Shot Mark2" assigned button, or the SHOTMARK 1 or 2 button on the IR Remote Commander.**

**Notes**

- No shot mark can be added if the memory card is write-protected.
- No shot mark can be added to the first or last frame of a clip.

# Clip Operations

During thumbnail screen playback, etc., you can operate the clips or confirm and change the subsidiary data for clips using the Clip Operation menus. The corresponding Clip Operation menu pops up on the screens as shown below when you press the SET/SEL button or the jog dial.

## Clip Operation Menus

**Thumbnail screen** ***(page 69)***

- CANCEL
- DISP CLIP INFO
- OK MARK ADD (FAT only)
- OK MARK DELETE (FAT only)
- OK FLAG ADD (UDF/exFAT only)
- NG FLAG ADD (UDF/exFAT only)
- KEEP FLAG ADD (UDF/exFAT only)
- CLIP FLAG DELETE (UDF/exFAT only)
- LOCK CLIP (UDF/exFAT only)
- UNLOCK CLIP (UDF/exFAT only)
- COPY CLIP
- DELETE CLIP
- ALL MARKS
- SHOT MARK1
- SHOT MARK2
- REC START MARK (UDF/exFAT only)
- EXPAND CLIP

**Expand Clip screen** *(page 73)*

- CANCEL
- EXPAND (COARSE)
- EXPAND (FINE)
- PAUSE
- SET INDEX PIC
- SHOT MARK1 ADD
- SHOT MARK2 ADD
- SHOT MARK1 DEL
- SHOT MARK2 DEL
- DIVIDE CLIP (FAT only)

**Shot Mark screen** *(page 74)*

- CANCEL
- PAUSE
- SET INDEX PIC
- SHOT MARK1 DEL
- SHOT MARK2 DEL
- DIVIDE CLIP (FAT only)

**Note**

Selectable menu items are limited in SD Mode.

## Basic Operations of the Clip Operation Menus

Use the joystick or the jog dial to select a menu item, then press the SEL/SET button or the jog dial.
Pressing the CANCEL button restores the previous condition.
Selecting “CANCEL” from a Clip Operation menu turns the Clip Operation menu off.

**Notes**

- When the SxS memory card is write-protected, some operations are unavailable.
- There may be items that cannot be selected depending on the status when the menu is displayed.

### Clip Operation menu on the thumbnail screen

Pressing the SEL/SET button or the jog dial with the thumbnail screen *(page 65)* displayed calls the Clip Operation menu for the clip at the cursor.

| Item | Function |
|---|---|
| DISP CLIP INFO | Displays the clip's information screen *(page 70)*. |
| OK MARK ADD 1) | Adds an OK mark *(page 71)*. |
| OK MARK DELETE 1) | Deletes the OK mark *(page 71)*. |
| OK FLAG ADD 2) | Adds an OK flag *(page 71)*. |
| NG FLAG ADD 2) | Adds a NG flag *(page 71)*. |
| KEEP FLAG ADD 2) | Adds a KP flag *(page 71)*. |
| CLIP FLAG DELETE 2) | Deletes the flag *(page 71)*. |
| LOCK CLIP 2) | Locks and protects a clip *(page 71)*. |
| UNLOCK CLIP 2) | Unlocks a protected clip *(page 71)*. |
| COPY CLIP | Copies the clip to another SxS memory card *(page 71)*. |
| DELETE CLIP | Deletes the clip *(page 72)*. |
| ALL MARKS 3) | Displays thumbnails of all frames with an essence mark recorded *(page 73)*. |
| SHOT MARK1 3) | Displays only thumbnails of frames with shot mark 1 recorded *(page 73)*. |
| SHOT MARK2 3) | Displays only thumbnails of frames with shot mark 2 recorded *(page 73)*. |
| REC START MARK | Displays thumbnails of frames with a Recording Start mark and the first frames of clips without Recording Start marks *(page 73)*. |
| EXPAND CLIP | Switches to the EXPAND CLIP screen *(page 72)*. |

*1)* Effective with FAT HD Mode only.
*2)* Effective with UDF and exFAT only.
*3)* Effective with UDF, exFAT, and FAT HD Mode.

## Displaying the Detailed Information of a Clip

Select “DISP CLIP INFO” from a Clip Operation menu.

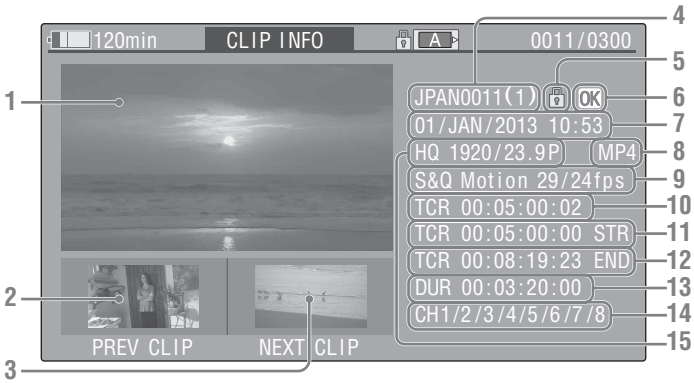


1. **Image of the current clip**
2. **Image of the previous clip**
   Press the PREV button to switch to the clip info screen of the previous clip.
   In FAT SD Mode, the previous segment of a segmented clip is displayed.
3. **Image of the next clip**
   Press the NEXT button to switch to the clip info screen of the next clip.
   In FAT SD Mode, the next segment of a segmented clip is displayed.
4. **Clip name**
   For a clip name of 12 characters or longer, only the first 5 and last 5 characters of the name are displayed. To check the non-displayed block of the name, press the jog dial or the SEL/SET button to display the entire clip name (Long-Display mode). Press the jog dial or the SEL/SET button again to cancel Long-Display mode. Long-Display mode is also canceled by switching to the previous or next clip with the PREV or NEXT button.
   In FAT SD Mode, if the file was split into multiple parts because its file size exceeded 2 GB, the segment number is displayed after the name, separated with a slash.
5. **Lock mark (UDF, exFAT, and FAT HD Mode only)**
   UDF, exFAT: A lock mark appears if the selected clip is locked.
   FAT HD Mode: A lock mark appears if the selected clip has an OK mark.
6. **OK/NG/KP mark (UDF, exFAT, and FAT HD Mode only)**
   UDF, exFAT: The mark is displayed if the selected clip has an OK/NG/KP flag.
   FAT HD Mode: The OK mark is displayed if the selected clip has an OK mark.
7. **Date and starting time of recording**
8. **File format**
   The file format (MXF, MP4, AVI) of the selected clip is displayed.
9. **Special recording information (UDF, exFAT, and FAT HD Mode only)**
   If the selected clip was recorded in a special recording mode (Slow & Quick Motion, Interval Recording, or Frame Recording), the mode is displayed.
   Clips recorded in Slow & Quick Motion display the “Recording frame rate/playback frame rate fps” to the right.
10. **Timecode of the displayed frame**
11. **Timecode at the recording starting point**
12. **Timecode at the recording ending point**
13. **Duration of the clip**
14. **Recorded audio channels**
15. **Recorded video format**

## Adding/Deleting a Flag (UDF/exFAT Only)

You can add an OK/NG/KP flag to clips recorded in UDF/exFAT. By adding flags, you can set the camcorder to display only clips with certain flag settings on the thumbnail screen (OK/NG/KP/None-Clip thumbnail screen) *(page 66)*.
When adding a flag, you can select from "OK FLAG ADD," "NG FLAG ADD," and "KEEP FLAG ADD" in the Clip Operation menu *(page 69)* on the thumbnail screen. When deleting a flag, select "CLIP FLAG DELETE."

**Note**

Flagged clips are not protected. To protect clips from deletion, select "LOCK CLIP" in the Clip Operation menu *(page 69)* on the thumbnail screen. To remove the protection, select "UNLOCK CLIP."

## Adding/Deleting the OK Mark (FAT HD Mode Only)

By adding an OK mark to clips recorded in FAT HD Mode, you can set the camcorder to display only the necessary clips on the thumbnail screen *(page 66)*. Clips with an OK mark added are blocked from being deleted or segmented. To delete or segment them, remove the OK mark.
From the thumbnail screen Clip Operation menu *(page 69)*, you can select "OK MARK ADD" to add an OK mark, or "OK MARK DELETE" to delete the OK mark.

## Copying Clips

You can copy clips on an SxS memory card to another SxS memory card.
Each clip is copied with the same name to the destination SxS memory card.

**Notes**

- If there is another clip having the same name on the destination SxS memory card, the clip is copied under a name adding a single-digit number in parentheses to the end of the original clip name.
  The parenthetical number is the minimum value that does not exist in the destination memory card.
  **Examples:**
  ABCD0002(1) if ABCD0002 exists
  ABCD0002(2) if ABCD0002(1) exists
  ABCD0005(4) if ABCD0005(3) exists
- When using FAT, you cannot copy a file 10 times or more if clips with the same clip name followed by parenthetical numbers (1) to (9) already exist on the card.
- When using UDF/exFAT, you cannot copy a clip when the same clip already exists on the destination SxS memory card.
- A warning message is displayed if there is not sufficient space on the destination SxS memory card. Replace the SxS memory card with one with sufficient space.
- When copying an SxS memory card on which multiple clips have been recorded, copying all clips to the end may not be achieved, even if the destination card has the same capacity as the source card, depending on usage conditions, memory characteristics, etc.

### Copying a specified clip

You can copy a clip selected on the thumbnail screen to another SxS memory card.
Select "COPY CLIP" from the Clip Operation menu.

### Copying clips collectively

By using the Setup menu, you can copy clips on an SxS memory card collectively to another SxS memory card.
If the memory card contains clips of both HD and SD Mode, only the clips of the currently selected mode are copied. This may be convenient when you wish to extract clips of the same mode only.
Select "Clips" in "Copy All" *(page 105)* in the OTHERS menu.

## Deleting Clips

You can delete clips from the SxS memory card. Select “DELETE CLIP” from the Clip Operation menu.

**Note**

Clips with an OK mark and flagged clips set to “LOCK CLIP” cannot be deleted.
To delete them, release the OK mark or the LOCK CLIP setting before performing the delete operation.

### Deleting clips collectively

By using the Setup menu, you can delete clips from an SxS memory card collectively.
Select “All Clips DEL” in “Clip” *(page 104)* in the OTHERS menu.

**Notes**

- If the memory card contains clips of both HD and SD Mode, only the clips of the currently selected mode are deleted.
- Clips with an OK mark and flagged clips set to “LOCK CLIP” cannot be deleted.

## Displaying the EXPAND CLIP Screen

In UDF, exFAT, and FAT HD Mode, the EXPAND CLIP screen permits you to divide a clip into 12 blocks of equal duration and show a thumbnail image of the first frame of each block on the screen.
In FAT SD Mode, the EXPAND CLIP screen shows the thumbnail images of the first frames of the segment files only for a clip segmented because its file size exceeded 2 GB.
This helps you to quickly cue up to a desired scene in a clip of long duration.
You can display the EXPAND CLIP screen by selecting the clip on the thumbnail screen.

**1 Select a clip on the thumbnail screen, then press the SEL/SET button or the jog dial.**

The corresponding Clip Operation menu pops up.

**2 Select “EXPAND CLIP.”**

The EXPAND CLIP screen appears for the clip that you selected on the thumbnail screen.

### EXPAND CLIP screen in UDF/exFAT/FAT HD Mode

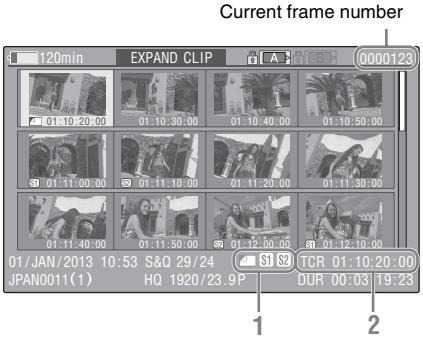


Detailed information for the clip is displayed at the bottom of the screen.
The items other than the following are the same as those on the normal thumbnail screen *(page 65)*:

**1. Frame information**

The following icons show the marking for the frame at the cursor.

| | |
|---|---|
| | Index frame |
| S1 | Frame with shot mark 1 added |
| S2 | Frame with shot mark 2 added |

The same icons may also be displayed below the thumbnail image of each frame. If the frame has multiple markings, one of the icons is displayed, in the priority order of index frame, shot mark 1, and shot mark 2.

**2. Timecode indication**

The timecode of the frame at the cursor is displayed.

## EXPAND CLIP screen in FAT SD Mode

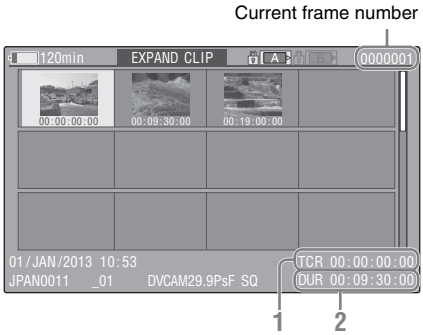


Detailed information for the clip is displayed at the bottom of the screen.
The items other than the following are the same as those on the normal thumbnail screen *(page 65)*:

1. **Timecode indication**
   The timecode of the segmentation file at the cursor is displayed.
2. **Duration**
   The duration of the segmentation file at the cursor is displayed.

## Clip Operation menu on the EXPAND CLIP screen

### UDF/exFAT/FAT HD Mode

When you select a frame on the EXPAND CLIP screen and press the SEL/SET button or the jog dial, the Clip Operation menu pops up to enable operations such as displaying more detailed split displays and saving the frames after the selected frame as different clip.

| Item | Function |
|---|---|
| EXPAND (COARSE) | To decrease the number of partitions of the clip |
| EXPAND (FINE) | To increase the number of partitions of the clip |
| PAUSE | To set to Pause mode at the selected frame |
| SET INDEX PIC | To specify the selected frame for the index frame of the clip *(page 74)* |
| SHOT MARK1 ADD | To add shot mark 1 to the selected frame *(page 74)* |
| SHOT MARK2 ADD | To add shot mark 2 to the selected frame *(page 74)* |
| SHOT MARK1 DEL | To delete shot mark 1 from the selected frame *(page 74)* |
| SHOT MARK2 DEL | To delete shot mark 2 from the selected frame *(page 74)* |
| DIVIDE CLIP | To divide the clip into two clips at the selected frame *(page 74)* (FAT HD mode only) |

### FAT SD Mode

You can select “PAUSE” only on the EXPAND CLIP screen in FAT SD Mode.

# Displaying the SHOT MARK Screen (UDF/exFAT/FAT HD Mode)

When one or more shot marks or recording start marks are recorded for a single clip, you can display only frames with those marks as thumbnail images on the screen.

**1 Select a clip on the thumbnail screen, then press the SEL/SET button or the jog dial.**

**2 Select “ALL MARK,” “SHOT MARK1,” “SHOT MARK2,” or “REC START MARK” from the Clip Operation menu *(page 69)*.**

## SHOT MARK screen example (when ALL MARKS is selected)

The detailed information of the clip is displayed at the bottom of the screen.
The items other than the following are the same as those on the EXPAND CLIP screen *(page 72)* in UDF, exFAT, and FAT HD mode:

1. **Timecode indication**

The timecode of the frame at the cursor on the SHOT MARK screen is displayed.

**Move the cursor to the first/last frame**

When the cursor is at a user-designated position, press the F REV and PREV buttons simultaneously to move the cursor the first frame. Press the F FWD and NEXT buttons simultaneously to move the cursor to the last frame.

**Switch to the clip shot mark screen for a different clip**

When the cursor is at the first frame for a clip, press the PREV or up button, or turn the jog dial up to switch to the previous displayable clip shot mark screen.
When the cursor is at the last frame for a clip, press the NEXT or down button, or turn the jog dial down to switch to the next displayable clip shot mark screen.

### Clip Operation menu on the SHOT MARK screen

When you select a frame on the SHOT MARK screen and press the SEL/SET button or the jog dial, the Clip Operation menu pops up to permit you further operations.

| Item | Function |
|---|---|
| PAUSE | To set to Pause mode at the selected frame |
| SET INDEX PIC | To specify the selected frame for the index frame of the clip *(page 74)* |
| SHOT MARK1 DEL | To delete the shot mark 1 from the selected frame *(page 74)* |
| SHOT MARK2 DEL | To delete the shot mark 2 from the selected frame *(page 74)* |
| DIVIDE CLIP | To divide the clip into two clips at the selected frame *(page 74)* (FAT HD mode Only) |

## Adding/Deleting Shot Marks (UDF/exFAT/FAT HD Mode)

### Adding a shot mark in Pause mode

Add a shot mark by pressing the assignable button to which you assigned “SHOT MARK1” or “SHOT MARK2.”

### Adding a shot mark on the EXPAND CLIP screen

Select “SHOT MARK1 ADD” or “SHOT MARK2 ADD” from the Clip Operation menu.

### Deleting a shot mark

You can delete shot marks on the EXPAND CLIP screen *(page 72)* or on the SHOT MARK screen *(page 73)*.
Select “SHOT MARK1 DEL” or “SHOT MARK2 DEL” from the Clip Operation menu.

## Changing the Index Frame (UDF/exFAT/FAT HD Mode)

You can change the index frame to another frame you selected on the EXPAND CLIP screen *(page 72)* or the SHOT MARK screen *(page 73)*.
Select “SET INDEX PIC” from the Clip Operation menu.

**Note**

Even if you specify a frame other than the top frame for the index frame, playback always begins from the top frame when you start it from the thumbnail screen.

## Dividing a Clip (FAT HD Mode Only)

In FAT HD Mode, you can divide a clip into two different clips at the frame you select on the EXPAND CLIP screen *(page 72)* or the SHOT MARK screen *(page 73)*.
Select “DIVIDE CLIP” from the Clip Operation menu.
The first 4 characters of the original clip name are carried on, continuing to the last number on the memory card by the second 4 numerics.

**Example:** If you divide a clip named ABCD0002 into two clips under the condition where a new clip will be named EFGH0100, clip ABCD0100 and clip ABCD0101 are created.

**Note**

If the remaining space on the memory card is insufficient for divided clips, a message informing you of it appears.

# Showing the Status Screens

Press the STATUS button *(page 11)* to display status screens on the viewfinder screen/external video monitor.
Use the joystick *(page 11)* or the jog dial *(page 11)* to perform operations and switch the screens in sequence.
When you press the STATUS button again, the status screen display is canceled.

*For connections of an external monitor, see "Connecting External Monitors and Recording Devices" on page 109.*

## Camera Status Screen

### White Bal: White balance status

| Display | Contents |
|---|---|
| B | The color temperature stored in white memory B is indicated. |
| A | The color temperature stored in white memory A is indicated. |
| PRST | The color temperature set as the preset white is indicated. The color temperature of preset white can be changed using the PICTURE PROFILE menu. |

### Gain: GAIN switch settings

The gain values of the positions L, M, and H of the GAIN switch assigned in the CAMERA SET menu are displayed.

### Handle Zoom: Handle zoom settings

The "Handle Zoom" setting *(page 82)* in the CAMERA SET menu are displayed.

| Display | Contents |
|---|---|
| Off | Zoom does not work. |
| Low | Zoom works at the speed that is set for "Low" in "Zoom Speed." |
| High | Zoom works at the speed that is set for "High" in "Zoom Speed." |
| Vari | The deeper the on-handle ZOOM button is pressed, the faster the zoom speed. |

### Zoom Speed

The zoom speed that is set at "High"/"Low" of "Zoom Speed" *(page 82)* in the CAMERA SET menu are displayed.

| Display | Contents |
|---|---|
| L | Zoom speed that is set at "Low" of "Zoom Speed." |
| H | Zoom speed that is set at "High" of "Zoom Speed." |

### Zebra: Zebra status

| Display | Contents |
|---|---|
| 1 | "On" is displayed and the setting of "Zebra1 Level" in "Zebra" in the VF SET menu is displayed to the right when "Zebra Select" in "Zebra" in the VF SET menu is set to "1" or "Both" and you set the Zebra function to "On." If the Zebra function is set to "Off" or "Zebra Select" is set to "2," "Off" appears. |
| 2 | "On" is displayed when "Zebra Select" in "Zebra" in the VF SET menu is set to "2" or "Both" and you set the Zebra function to "On." If the Zebra function is set to "Off" or "Zebra Select" is set to "1," "Off" appears. |

### Skin Tone Detail: Skin-tone detail status

The current status ("On" or "Off") of "Setting" of "Skin Tone Detail" of the PICTURE PROFILE menu is displayed.

### Picture Profile: Picture Profile selection status

The selected Picture Profile number and name are displayed. (If Picture Profile is off, "Off" is displayed.)

## Audio Status Screen

### Output CH: External output/headphone output

Depending on the setting of "Output CH" in "Audio Output" in the AUDIO SET menu and the setting of "Monitor CH," the audio channel(s) external output and headphones output is displayed as follows.

- CH-1: When left/right are CH-1
- CH-2: When left/right are CH-2
- CH-3: When left/right are CH-3
- CH-4: When left/right are CH-4
- CH-1/CH-2: When left is CH-1 and right is CH-2 (stereo)
- CH-3/CH-4: When left is CH-3 and right is CH-4 (stereo)
- CH-1+CH-2: When both left and right are CH-1 and CH-2 (monaural)
- CH-3+CH-4: When both left and right are CH-3 and CH-4 (monaural)

### Speaker: Speaker output

The audio channel(s) output to the internal speaker is displayed.
As the speaker is monaural, "CH-1+CH2" or "CH-3+CH-4" is displayed when "Monitor CH" is set to stereo. With non-stereo settings, the setting of "Monitor CH" in "Audio Output" in the AUDIO SET menu is displayed as it is.

### CH-1/CH-2/CH-3/CH-4: Audio level meters

The 4-channel (2-channel when using 2-channel settings) audio level meters and input sources are displayed.
While recording (or standing by to record), the level of the audio inputs (the EE audio levels) are displayed. During playback, the audio playback level is displayed according to the setting of "Output CH" in "Audio Output" in the AUDIO SET menu.
If audio is input from the i.LINK (HDV/DV) connector while displaying thumbnails, while playback is stopped, or while recording an external signal, the audio input level is displayed. In this case, the leftmost channels that are displayed are CH-1 and CH-2, regardless of the setting of "Output CH" in "Audio Output" in the AUDIO SET menu.

### Wind Filter

The "On"/"Off" setting of Wind Filter is displayed to the right of each input source. Wind Filter settings can be made from "Wind Filter CH1" to "Wind Filter CH4" in "Audio Input" in the AUDIO SET menu.

## Video Status Screen

### Video Format

Video Format: Video format setting
The number of vertical lines, frame rate, and scan format (i/P) of the video format set in "Format" in "System" in the OTHERS menu are displayed.

### Rec Mode: Recording mode

The video format set in "Format" in "System" in the OTHERS menu is displayed.

### SDI Output: Output for SDI

The "SDI" setting in "SDI/HDMI/i.LINK I/O Select" in the VIDEO SET menu is displayed.

### HDMI Output: Output for HDMI

The "HDMI" setting in "SDI/HDMI/i.LINK I/O Select" in the VIDEO SET menu is displayed.

### i.LINK I/O: Input and output for i.LINK

The "i.LINK" setting in "SDI/HDMI/i.LINK I/O Select" in the VIDEO SET menu is displayed.

### Down Converter: SD output down-converter setting

In HD mode, the "Down Converter" setting ("Squeeze," "Letterbox," "Edge Crop") in the VIDEO SET menu is displayed.
In SD mode, "Edge Crop" is displayed when EC (Edge Crop) in "Format" in "System" in the OTHERS menu is selected, and "Squeeze" is displayed when SQ (Squeeze) in "Format" in "System" in the OTHERS menu is selected.

### 23.98P Output: 23.98P output mode

The "23.98P Output" setting (23.98PsF, 59.94i (2-3 Pull Down)) in the VIDEO SET menu is displayed.

## Button/Remote Status Screen

### Assign Button: Assignable button statuses

The functions assigned with the "Assign Button" in the OTHERS menu to the respective assignable buttons are displayed.

### IR Remote: IR Remote Commander status

The "IR Remote" setting in the OTHERS menu is displayed.

## Battery/Media Status Screen

**Battery: Battery charge remaining**

The remaining charge level of the mounted battery pack is displayed.

**Charge Count: Repeated charge times**

The number of times that the mounted battery pack has been charged is displayed.

**Media A/Media B: Remaining space, available recording time, and estimated service life (rewriting limit)**

The remaining space of the SxS memory cards in the respective card slots is indicated on the meters.
At the right, the available time for recording if done at the current bit rate is displayed, in minutes.
The time indication will be "- - min" if no SxS memory card or an invalid card is in the slot.
If the card is write-protected, a icon is shown to the right of the time indication.
The Life value is displayed only for an SxS memory card which supports the life value indication. It indicates the estimated remaining usable period of the card (virgin status as 100%).

# Overview of the Setup Menus

Press the MENU button to display setup menus on the viewfinder screen with settings necessary for recording and playback. (You can also display setup menus on an external monitor.) Set items by selecting them from the following menus.

**CAMERA SET menu:** For setting items related to recording other than those for picture quality. (For picture quality-related items, use the PICTURE PROFILE menu *(page 55)*.)

**AUDIO SET menu:** For setting audio-related items.

**VIDEO SET menu:** For setting video output-related items.

**VF SET menu:** For setting items related to the viewfinder screen.

**TC/UB SET menu:** For setting items related to timecodes and user bits.

**OTHERS menu:** For setting other items.

## Setup Menu Layers

**MENU**

- CAMERA SET
  - Gain Setup
  - Shutter
  - SLS/EX SLS
  - MF Assist
  - Color Bars
  - Flicker Reduce
  - Handle Zoom
  - Zoom Speed
  - Zoom Transition
  - Interval Rec
  - Frame Rec
  - Clip Cont.Rec
  - P.Cache Rec
  - S&Q Motion
  - Rec Review
  - TLCS
  - Shockless White
  - White Switch<B>
  - ATW Speed
  - ATW Mode
  - Wide Conversion
  - Image Inversion
  - Auto Black Bal.
  - ND Comp
- AUDIO SET
  - Audio Input
  - Audio Output
- VIDEO SET
  - Input Source Select
  - SDI/HDMI/i.LINK I/O Select
  - SDI/HDMI/Video Out Super
  - Down Converter
  - 23.98P Output
  - SDI Rec Control
  - Match Clip Name
- VF SET
  - VF
  - Peaking
  - Marker
  - Zebra
  - Display On/Off

(continues)

- TC/UB SET
  - Timecode
  - Users Bit
  - TC Format
- LENS File
  - Information
  - Operation
  - Setting
  - Auto FB Adjust
- OTHERS
  - All Reset
  - Camera Data
  - Time Zone
  - Clock Set
  - Language
  - Assign Button
  - Tally
  - Hours Meter
  - IR Remote
  - Battery Alarm
  - Battery INFO
  - Genlock
  - Direct Menu
  - Trigger Mode
  - System
  - Clip
  - Copy All
  - Format Media
  - Plan.Metadata
  - Network
  - Wi-Fi
  - Fan Control
  - RM/USB A Sel
  - Version
  - Version Up
  - Menu Scroll

# Basic Menu Operations

## Menu controls

**MENU button** ***(page 11)***
To turn Menu mode to use Setup menus on/off.

**Joystick, SEL/SET button** ***(page 11)***
When you move the joystick, the cursor moves in the corresponding direction, permitting you to select menu items or setting values.
Press the SEL/SET button to enter the highlighted item.

**Jog dial (SEL/SET dial)** ***(page 11)***
When you turn the dial, the cursor moves up or down, permitting you to select menu items or setting values.
Press the jog dial to select the highlighted item.

**CANCEL button** ***(page 11)***
To return to the previous layer of the menu. An uncompleted change is canceled.

**Note**

In Expanded Focus mode *(page 44)*, the setup menu cannot be used. Press the EXPANDED FOCUS button to exit this mode.

## Setting the Setup menus

Rotate the jog dial or move the joystick to set the cursor to the icon of the menu you wish to set, then push the jog dial or SEL/SET button to select that menu.

- The menu item selection area can show 7 lines at maximum. When all the selectable items cannot be displayed at one time, you can scroll the display up or down by moving the cursor. A triangle appears at the upper or lower right corner of the menu item selection area to indicate that scrolling is enabled.
- For items having a wide range of available values (example: –99 to +99), the available value area is not displayed. The current setting is highlighted instead, indicating that the setting is ready for change.
- When you select "Execute" for an execution item, the corresponding function is executed.
- When you select an item that you must confirm before execution, the menu display temporarily disappears, and a confirmation message is displayed. Following the instructions of the message, and specify whether to execute or cancel.

## Entering a character string

When you select an item for which a character string, such as a time value or filename, is to be specified, the input area for the character string is highlighted, and "SET" appears at the right end.

1. **Select characters by moving the joystick or turning the jog dial, then press the SEL/SET button or the jog dial to execute.**

   The cursor moves to the next column.
   To return to the previous column, tilt the joystick to the left.

2. **Perform setting in the same manner up to the last column/digit.**

   The cursor moves to "SET."

3. **Press the jog dial or the SEL/SET button.**

   The setting is completed.

# Setup Menu List

The functions and available settings of menus are listed below.
The default settings set at the factory are shown in bold face (example: **Speed**). The items marked with M in the Menu items column cannot be set while displaying the thumbnail screen or during playback operations.

## CAMERA SET Menu

| CAMERA SET<br>Menu items | Subitems and setting values | Contents |
|---|---|---|
| **Gain Setup**<br>Assigning gain levels to the three GAIN switch positions | Low<br>–3 / **0** / 3 / 6 / 9 /12 /18 dB | Set the gain level to be used when the switch is set to the L position. |
| | Mid<br>–3 / 0 / 3 / 6 / **9** /12 /18 dB | Set the gain level to be used when the switch is set to the M position. |
| | High<br>–3 / 0 / 3 / 6 / 9 /12 / **18** dB | Set the gain level to be used when the switch is set to the H position. |
| **Shutter**<br>Specifying operating conditions of the electrical shutter<br>Unselectable when Slow Shutter mode/ Supersensitized Slow Shutter mode is set. | Mode<br>**Speed** / Angle / ECS | Select modes of the Electronic Shutter.<br>Speed mode/Angle mode (standard modes): These modes may be especially effective when you wish to record a quick-moving subject with minimal blurring. You can select Speed mode to specify the shutter speed in seconds, or Angle mode to specify the shutter speed by the shutter angle.<br>ECS (Extended Clear Scan) mode: This mode may be used to shoot a monitor screen, eliminating horizontal bands. |
| | Shutter Speed<br>1/32, 1/33, 1/40, 1/48, 1/50, 1/60, 1/96, **1/100**, 1/120, 1/125, 1/250, 1/500, 1/1000, 1/2000 | Set the shutter speed when Speed mode is selected. The available setting values vary depending on the frame frequency of the video format selected. |
| | Shutter Angle<br>11.25º / 22.5º / 45º / 72º / 86.4º / 90º / 144º / 150º / 172.8º / **180º** / 216º | Set the shutter angle when Angle mode is selected. The following frame rates are unavailable when “S&Q Motion” is set from “1” to “16”: 72°, 86.4°, 144°, 150°, 172.8°, 216°. |
| | ECS Frequency<br>**60.00** | Set the ECS frequency when ECS mode is selected. The available setting values vary depending on the frame frequency of the video format selected. |
| **SLS/EX SLS**<br>Setting the Slow Shutter mode/ Supersensitized Slow Shutter mode | Setting<br>**OFF** / 2 / 3 / 4 / 5 / 6 / 7 / 8 / 16 / 32 / 64 | Set the number of cached frames.<br>**Notes**<br>• This cannot be set while recording/playing or while the thumbnail screen is displayed.<br>• This cannot be set while using Slow & Quick Motion or Cache Recording mode<br>• This cannot be set if the video format is set to “HQ 1280×720/23.98P” (for UDF), “XAVC-I 1080/23.98P” (for exFAT), or “SP 1440×1080/23.98P” (for FAT). |

| CAMERA SET<br>Menu items | Subitems and setting values | Contents |
|---|---|---|
| **MF Assist**<br>Turning the MF Assist Function on/off | On / **Off** | Set to "On" to precisely adjust the focus automatically after you roughly adjust it manually. |
| **Color Bars**<br>Setting the Color Bars | Camera/Bars<br>**Camera** / Bars | Select "Bars" to output color bars. |
| | Bars Type<br>**Multi** / 75% / 100% / SMPTE | Select the type of color bar to be output when "Bars" is selected.<br>Multi: Multiformat color bars are output.<br>75%: To output 75% color bars<br>100%: To output 100% color bars<br>SMPTE: To output SMPTE color bars. |
| **Flicker Reduce**<br>Setting Flicker Compensation | Mode<br>Auto / On / **Off** | Set the operation of the Flicker-Reduction function.<br>On: To always activate it<br>Auto: To automatically activate it when flicker is detected.<br>Off: To not activate it<br>**Notes**<br>• It is recommended to set this to "Off" when shooting outdoors or under lighting that does not cause flicker. (It can be also "Auto," but the compensation may not be done properly.)<br>• It is recommended to set this to "Auto" when shooting indoors or under various lighting that may cause flicker, such as fluorescent, sodium, or mercury-vapor lamps. (If continuously shooting under lighting that may cause flicker, "Mode" should be set to "On.") |
| | Frequency<br>50 Hz / 60 Hz<br>**60 Hz**: UC model<br>**50 Hz**: Other models | Set to the power supply frequency of the light source causing flicker. |
| **Handle Zoom**<br>Setting the zoom operation | **Off** / Low / High / Vari | Set the zoom operation by using the on-handle ZOOM button.<br>Off: Zoom does not work.<br>Low: Zoom works at the speed that is set for "Low" in "Zoom Speed."<br>High: Zoom works at the speed that is set for "High" in "Zoom Speed."<br>Vari: The deeper the on-handle ZOOM button is pressed, the faster the zoom speed. |
| **Zoom Speed**<br>Setting the zoom speed | High<br>1 to 99 **(70)** | Set the zoom speed for the "High" setting of "Handle Zoom." |
| | Low<br>1 to 99 **(30)** | Set the zoom speed for the "Low" setting of "Handle Zoom."<br>**Note**<br>Zooming may not operate smoothly if you select a low speed. |
| | Remote<br>1 to 99 **(50)** | Set the speed of zooming to be executed when you press the ZOOM T/W button of the IR Remote Commander.<br>**Note**<br>If the infrared line from the Remote Commander is not received properly, zooming may not operate smoothly. |

| CAMERA SET | | |
|---|---|---|
| **Menu items** | **Subitems and setting values** | **Contents** |
| **Zoom Transition**<br>Setting the zoom operation mode | **Linear** / Soft | Set the operation mode at the beginning and end of zooming with the on-handle ZOOM button.<br>Linear: Zooming immediately begins at the specified speed when the on-handle ZOOM button is pressed and immediately ends when the button is released.<br>Soft: Zooming gradually increases the speed up to the specified speed after the on-handle ZOOM button is pressed and gradually decreases the speed and ends after the button is released. (1 second at maximum from when the button is released till the operation ends.) |
| **Interval Rec**<br>Setting the Interval Recording function | Setting<br>On / **Off** | Turn the Interval Recording function on/off. |
| | Interval Time<br>**1** to 10/15/20/30/40/50 sec<br>1 to 10/15/20/30/40/50 min<br>1 to 4/6/12/24 hour | Set the interval of recording in Interval Recording. |
| | Number of Frames<br>**1** / 3 / 6 / 9 or<br>**2** / 6 / 12 (When using 720/59.94P or 720/50P) | Set the number of frames to be recorded at a time in Interval Recording. |
| **Frame Rec**<br>Setting the Frame Recording function | Setting<br>On / **Off** | Turn the Frame Recording function on/off. |
| | Number of Frames<br>**1** / 3 / 6 / 9 or<br>**2** / 6 / 12 (When using 720/59.94P or 720/50P) | Set the number of frames to be recorded at a time in Frame Recording. |
| **Clip Cont. Rec**<br>Setting the Clip Continuous Recording function | Setting<br>On / **Off** | Turn the Clip Continuous Recording function on/off. |
| **P.Cache Rec**<br>Setting the Picture Cache Recording function | Setting<br>On / **Off** | Turn the Picture Cache Recording function on/off. |
| | Rec Time<br>**0-2sec** / 2-4sec / 4-6sec / 6-8sec / 8-10sec / 10-12sec / 12-14sec / 13-15sec | Set the time to cache video in the picture cache memory (the time to a point where recording is to start when you press the REC START/STOP button in Picture Cache Recording).<br>**Note**<br>When you set “OTHERS” > “System” > “F.Sys.” to “exFAT,” “0-2sec” or “2-4sec” can be selected. |

| CAMERA SET | | |
|---|---|---|
| **Menu items** | **Subitems and setting values** | **Contents** |
| **S&Q Motion**<br>Setting the Slow & Quick Motion function | On Format<br>UDF<br>For NTSC or NTSC(J)<br>HD422 50/1080/29.97P,<br>HD422 50/1080/23.98P,<br>HD422 50/720/59.94P,<br>HD422 50/720/29.97P,<br>**HD422 50/720/23.98P**,<br>HQ 1920×1080/29.97P,<br>HQ 1920×1080/23.98P,<br>HQ 1280×720/59.94P<br>For PAL<br>HD422 50/1080/25P,<br>HD422 50/720/50P,<br>**HD422 50/720/25P**,<br>HQ 1920×1080/25P,<br>HQ 1280×720/50P<br><br>exFAT<br>For NTSC or NTSC(J)<br>XAVC-I 1080/29.97P,<br>XAVC-I 1080/23.98P,<br>**XAVC-I 720/59.94P**<br>For PAL<br>XAVC-I 1080/25P,<br>**XAVC-I 720/50P**<br><br>FAT<br>For NTSC or NTSC(J)<br>HQ 1920×1080/29.97P,<br>HQ 1920×1080/23.98P,<br>HQ 1280×720/59.94P,<br>HQ 1280×720/29.97P,<br>**HQ 1280×720/23.98P**<br>For PAL<br>HQ 1920×1080/25P,<br>HQ 1280×720/50P,<br>**HQ 1280×720/25P** | Set the video format for Slow & Quick Motion recording. |

| CAMERA SET | | |
|---|---|---|
| **Menu items** | **Subitems and setting values** | **Contents** |
| | Frame Rate<br>UDF<br>1 to 30 (NTSC)<br>When “On Format” is set to “HD422 50/1080/29.97P,” “HD422 50/1080/23.98P,” “HQ 1920×1080/29.97P,” or “HQ 1920×1080/23.98P”<br>1 to 60 (NTSC)<br>When “On Format” is set to “HD422 50/720/59.94P,” “HD422 50/720/29.97P,” “HD422 50/720/23.98P,” or “HQ 1280×720/59.94P”<br>1 to 25 (PAL)<br>When “On Format” is set to “HD422 50/1080/25P” or “HQ 1920×1080/25P”<br>1 to 50 (PAL)<br>When “On Format” is set to “HD422 50/720/50P,” “HD422 50/720/25P,” or “HQ 1280×720/50P”<br>exFAT<br>1 to 30 (NTSC)<br>When “On Format” is set to “XAVC-I 1080/29.97P” or “XAVC-I 1080/23.98P”<br>1 to 60 (NTSC)<br>When “On Format” is set to “XAVC-I 720/59.94P”<br>1 to 25 (PAL)<br>When “On Format” is set to “XAVC-I 1080/25P”<br>1 to 50 (PAL)<br>When “On Format” is set to “XAVC-I 720/50P”<br>FAT<br>1 to 30 (NTSC)<br>When “On Format” is set to “HQ 1920×1080/29.97P” or “HQ 1920×1080/23.98P”<br>1 to 60 (NTSC)<br>When “On Format” is set to “HQ 1280×720/59.94P,” “HQ 1280×720/29.97P,” or “HQ 1280×720/23.98P”<br>1 to 30 (PAL)<br>When “On Format” is set to “HQ 1920×1080/25P”<br>1 to 60 (PAL)<br>When “On Format” is set to “HQ 1280×720/50P” or “HQ 1280×720/25P” | Set the recording frame rate for Slow & Quick Motion recording. |

| CAMERA SET | | |
|---|---|---|
| **Menu items** | **Subitems and setting values** | **Contents** |
| **Rec Review**<br>Setting the playback time for Rec-Review | **3 sec** / 10 sec / Clip | Set the time to play the last recorded clip using the Rec-Review function.<br>3 sec: Last 3 seconds<br>10 sec: Last 10 seconds<br>Clip: Entire duration of the clip |
| **TLCS**<br>Setting the Total Level Control System (auto adjustment system of gain, exposure and shutter) | Level<br>+1.0 / +0.5 / ±**0** / –0.5 / –1.0 | Set the target level (to make brighter or darker) of auto iris control in TLCS. (This setting also affects the gain control in AGC mode and shutter-speed control in Auto Shutter mode.)<br>+1.0: Approx. one stop further open<br>+0.5: Approx. half a stop further open<br>±0: Standard<br>–0.5: Approx. half a stop further closed<br>–1.0: Approx. one stop further closed |
| | Mode<br>Backlight / **Standard** / Spotlight | Set the auto iris control mode in TLCS.<br>Backlight: Backlight mode to reduce darkening of the center subject against lights<br>Standard: Standard mode<br>Spotlight: Spotlight mode to reduce blown-out highlights on the center subject in the spotlight |
| | Speed<br>–99 to +99 (**+50**) | Set the tracing speed of TLCS control. |
| | AGC<br>On / **Off** | Turn the AGC (Auto Gain Control) function on/off. |
| | AGC Limit<br>3 / 6 / 9 / **12** / 18 dB | Set the maximum gain in AGC. |
| | AGC Point<br>**F2.8** / F4 / F5.6 | Set the iris point for switching to auto-iris and AGC (Auto Gain Control) control when AGC is on. |
| | Auto Shutter<br>On / **Off** | Turn the Auto Shutter control function on/off. |
| | A.SHT Limit<br>1/100, 1/150, 1/200, **1/250** | Set the maximum shutter speed in Auto Shutter control. |
| | A.SHT Point<br>F5.6 / F8 / F11 / **F16** | Set the exposure position for switching auto iris and auto shutter control when Auto Shutter is on. |
| **Shockless White**<br>Setting the shockless white balance | Off / 1 / **2** / 3 | Select the speed of change in white balance when the white balance mode is switched. Set to “Off” to instantly change the white balance.<br>Select a larger number to change the white balance more slowly through interpolation. |
| **White Switch <B>**<br>Setting for the WHITE BAL switch | **ATW** / MEM | Select the white balance adjustment mode selected at the B position of the WHITE BAL switch. |
| **ATW Speed**<br>Setting for Auto Tracing White Balance | 1 / 2 / **3** / 4 / 5 | Set the tracing speed of ATW. The larger the number you set, the speed becomes faster. |
| **ATW Mode**<br>ATW mode setting | **Natural** / Pure | Natural: Depending on the brightness of scenes, automatically adjusts the white balance to natural ambience.<br>Pure: Not leaving the blue color or red color, automatically adjusts the white balance closer to original colors. |

| CAMERA SET | | |
|---|---|---|
| **Menu items** | **Subitems and setting values** | **Contents** |
| **Wide Conversion**<br>Setting for use of a wide-conversion lens | On / **Off** | Set to “On” when a wide-conversion lens is attached. |
| **Image Inversion**<br>Setting the image inversion function | **Normal** / H INV / V INV / H+V | Normal: Normal image direction<br>H INV: To horizontally invert the image<br>V INV: To vertically invert the image<br>H+V: To horizontally and vertically invert the image<br>**Notes**<br>• This cannot be set while recording, while the color bars are displayed or while using Recording Review.<br>• This cannot be set while the automatic black balance function is set. |
| **Auto Black Bal.**<br>Setting the automatic black balance | **Execute** / Cancel | Turn the automatic black balance function on/off.<br>**Notes**<br>• This cannot be set while recording or while the color bars are displayed.<br>• This cannot be set while using the Picture Cache Recording mode, the Interval Recording mode, the Frame Recording mode, the Slow and Quick Motion mode, the Slow Shutter mode or the Supersensitized Slow Shutter mode. |
| **ND Comp**<br>Setting the out of register color correction for the ND filter | ND Offset Adjust<br>On / **Off** | Set the out of register color correction for the ND filter. |
| | Clear ND Offset<br>Execute / **Cancel** | Clear the value that is set. |
| | ND Adjust Mode CLR<br>**Yet** / OK | Displays the status of the out of register color correction for the ND filter.<br>Yet: Uncorrected.<br>OK: Corrected.<br>**Note**<br>If “ND Offset Adjust” is set to “Off,” these items do not appear. |
| | ND Adjust Mode ND1<br>**Yet** / OK | |
| | ND Adjust Mode ND2<br>**Yet** / OK | |
| | ND Adjust Mode ND3<br>**Yet** / OK | |

# AUDIO SET Menu

| AUDIO SET<br>Menu items | Subitems and setting values | Contents |
|---|---|---|
| **Audio Input**<br>Setting for audio inputs<br>M | CH3 Input Source<br>**Internal** / External | Set the audio signal source to be recorded for CH3 for a 4-channel recordable format.<br>Internal: Record the L side of the internal microphone for CH3.<br>External: Record the AUDIO IN CH1 signal for CH3. |
| | CH4 Input Source<br>**Internal** / External | Set the audio signal source to be recorded for CH4 for a 4-channel recordable format.<br>Internal: Record the R side of the internal microphone for CH4.<br>External: Record the AUDIO IN CH2 signal for CH4. |
| | EXT MIC CH1 Ref<br>–70 dB / **–60 dB** / –50 dB / –40 dB / –30 dB | Select the reference input level for when an external microphone is connected to the AUDIO IN CH1 connector and that signal is being used for the audio signal source for CH1 or CH3. This can be selected regardless of the setting of the AUDIO SELECT switch.<br>**Note**<br>This is unavailable when the AUDIO IN CH-1 switch is set to INT and "CH3 Input Source" is set to "Internal." This is also unavailable when the CH-1 input (LINE/MIC/MIC+48V) switch is set to LINE. |
| | EXT MIC CH2 Ref<br>–70 dB / **–60** dB / –50 dB / –40 dB / –30 dB | Select the reference input level for when an external microphone is connected to the AUDIO IN CH2 connector and that signal is being used for the audio signal source for CH2 or CH4. This can be selected regardless of the setting of the AUDIO SELECT switch.<br>**Note**<br>This is unavailable when the AUDIO IN CH-2 switch is set to INT and "CH4 Input Source" is set to "Internal." This is also unavailable when the CH-2 input (LINE/MIC/MIC+48V) switch is set to LINE. |
| | INT MIC Level<br>–12 dB / –6 dB / **0 dB** / +6 dB / +12 dB | Select the internal microphone level. This can be selected regardless of the AUDIO SELECT switch setting. |
| | Line Input Ref<br>**+4dB** / 0dB / –3dB / EBUL | Select the reference input level for when the AUDIO IN CH-1/CH-2 connectors are set to LINE. |
| | Reference Level<br>**–20dB** / –18dB / –16dB / –12dB / EBUL | Select the 1kHz test signal output level. |
| | Limiter Mode<br>**Off** / –6 dB / –9 dB / –12 dB / –15 dB / –17 dB | Select whether to activate the limiter when a loud signal is input while the AUDIO SELECT switch is set to MANU (manual). |
| | AGC Spec<br>**–6 dB** / –9 dB / –12 dB / –15 dB / –17 dB | Select the audio input level AGC. |

| AUDIO SET | | |
|---|---|---|
| **Menu items** | **Subitems and setting values** | **Contents** |
| | CH1&2 AGC Mode<br>Mono / **Stereo** | Select auto tuning for the input level of an analog audio signal recorded to CH-1/CH-2.<br>Mono: Perform for each channel.<br>Stereo: Perform in stereo mode. |
| | CH3&4 AGC Mode<br>**Mono** / Stereo / Off | Select auto tuning for the input level of an analog audio signal recorded to CH-3 or CH-4.<br>Mono: Perform for each channel.<br>Stereo: Perform in stereo mode.<br>Off: Do not perform auto tuning. The Limiter Mode setting is applied. |
| | 1KHz Tone<br>On / **Off** | Turn the 1-kHz reference tone signal on/off. |
| | Wind Filter CH-1<br>On / **Off** | Turn the wind filter for CH1 on/off. |
| | Wind Filter CH-2<br>On / **Off** | Turn the wind filter for CH2 on/off. |
| | Wind Filter CH-3<br>On / **Off** | Turn the wind filter for CH3 on/off. |
| | Wind Filter CH-4<br>On / **Off** | Turn the wind filter for CH4 on/off. |
| | EXT CH Select<br>CH-1<br>**CH-1/CH-2** | CH-1: To record the CH1 external input signal to both CH1 and CH2 (when the CH-2 AUDIO IN switch is set to EXT). If “CH4 Input Source” is set to “External,” you can also record to CH4.<br>CH-1/CH-2: To record each external input signal to its respective channel. |
| **Audio Output**<br>Setting for audio outputs | Monitor CH<br>**CH-1/CH-2** (**CH-3/CH-4**)<br>CH-1+CH-2 (CH-3+CH-4)<br>CH-1 (CH-3)<br>CH-2 (CH-4) | Select the audio channel(s) to be fed to the headphones and the built-in speaker.<br>CH-1/CH-2 (CH-3/CH-4): Stereo<br>CH-1+CH-2 (CH-3+CH-4): Mix<br>CH-1 (CH-3): CH-1 (CH-3) only<br>CH-2 (CH-4): CH-2 (CH-4) only<br>( ): with Output CH set to “CH-3/CH-4” |
| | Output CH<br>**CH-1/CH-2**<br>CH-3/CH-4 | Select audio output channels from either channels 1 and 2 or channels 3 and 4. |
| | Alarm Level<br>0 to 7 (**4**) | Set the alarm sound volume. |
| | Beep<br>On / **Off** | Select whether or not to sound a beep upon each operation. |

## VIDEO SET Menu

| VIDEO SET<br>Menu items | Setting values | Contents |
|---|---|---|
| **Input Source Select**<br>Setting the input source | **Camera** / i.LINK | Select video and audio signal for the input source.<br>Camera: Camera image<br>i.LINK: HDV/DVCAM input via the i.LINK (HDV/DV) connector<br>**Note**<br>i.LINK is unavailable when using UDF/exFAT. |
| **SDI/HDMI/ i.LINK I/O Select**<br>Selecting input/ output signals for the connectors | When using UDF HD or exFAT Mode<br>**HD SDI & HD HDMI**<br>SD SDI & SD HDMI i<br>SD HDMI P<br>Off<br>When using FAT HD Mode (HQ)<br>**HD SDI & HD HDMI**<br>SD SDI & SD HDMI i<br>SD HDMI i & DVCAM<br>SD HDMI P<br>Off<br>When using FAT HD Mode (SP)<br>**HD SDI & HD HDMI**<br>SD SDI & SD HDMI i<br>HD HDMI & HDV<br>SD HDMI i & HDV<br>SD HDMI P & HDV<br>SD HDMI i & DVCAM<br>Off<br>When using UDF SD Mode<br>**SD SDI & SD HDMI i**<br>Off<br>When using FAT SD Mode<br>**SD SDI & SD HDMI i**<br>SD HDMI i & DVCAM<br>Off | HD SDI & HD HDMI: To output HD SDI signals from the SDI OUT connector, and HD HDMI signals from the HDMI OUT connector.<br>SD SDI & SD HDMI i: To output SD SDI signals from the SDI OUT connector, and SD HDMI interlace signals from the HDMI OUT connector.<br>HD HDMI & HDV: To output HD HDMI signals from the HDMI OUT connector, and input/output HDV streams from the i.LINK (HDV/DV) connector.<br>SD HDMI i & HDV: To output SD HDMI interlace signals from the HDMI OUT connector, and input/output HDV streams from the i.LINK (HDV/DV) connector.<br>SD HDMI P & HDV: To output SD HDMI progressive signals from the HDMI OUT connector, and input/output HDV streams from the i.LINK (HDV/DV) connector.<br>SD HDMI i & DVCAM: To output SD HDMI interlace signals from the HDMI OUT connector, and input/output DVCAM streams from the i.LINK (HDV/DV) connector.<br>SD HDMI P: To output SD HDMI progressive signals from the HDMI OUT connector.<br>Off: There is no output from the SDI/HDMI/i.LINK connectors.<br>**Notes**<br>• Signals are not output from the SDI OUT connector when this is set to other than an HD SDI or SD SDI setting.<br>• Slow & Quick Motion mode cannot be used when this is set to input/output DVCAM streams. |
| **SDI/HDMI/ Video Out Super**<br>Setting the character information for each output | On / **Off** | Set whether to add the menus and status indications of the viewfinder screen to the output of the SDI OUT, HDMI OUT, and VIDEO OUT connectors.<br>**Note**<br>On the thumbnail, EXPAND CLIP and SHOT MARK screens, the menus and status indications on the viewfinder screen are displayed regardless of the setting of this item. |
| **Down Converter**<br>Selecting the operation mode of the down converter | **Squeeze** / Letterbox / Edge Crop | Set the output mode (aspect) for SD signals<br>Squeeze: To horizontally reduce a 16:9 picture to output a 4:3 picture<br>Letterbox: To mask the upper and lower areas of a 4:3 picture to display a 16:9 picture in the center of the screen<br>Edge Crop: To cut the both sides of a 16:9 picture to output a 4:3 picture |

| VIDEO SET | | |
|---|---|---|
| **Menu items** | **Setting values** | **Contents** |
| **23.98P Output**<br>Selecting Output mode | **59.94i (2-3 Pull Down)**/ 23.98PsF | Select the video output format when the video format for UDF HD Mode is HD422 50/1080/23.98P, HQ 1920×1080/23.98P, HD422 50/720/23.98P, HQ 1280×720/23.98P, the video format for exFAT Mode is XAVC-I 1080/23.98P, or the video format for FAT HD Mode is HQ 1920×1080/23.98P or HQ 1440×1080/23.98P. |
| **SDI Rec Control**<br>Setting the synchronized recording | **Off** / HD SDI Remote I/F / Parallel Rec | To turn the function to enabling recording synchronized with this camcorder.<br>HD SDI Remote I/F: To feed a REC trigger signal to a recorder connected to the SDI OUT connector.<br>Parallel Rec: Performs the recording controls by interlocking to the camcorder's recording operation. |
| **Match Clip Name** | On / **Off** | Set whether to add the clip name information to the SDI output. |

# VF SET Menu

| VF SET<br>Menu items | Subitems and setting values | Contents |
|---|---|---|
| **VF**<br>Setting the viewfinder | Color<br>–99 to +99 (±**0**) | Adjust the color of pictures in the viewfinder. |
| | Mode<br>**Color** / B&W | Select the display mode of the viewfinder.<br>Color: Color mode<br>B&W: Monochrome mode |
| **Peaking**<br>Setting the peaking function for the viewfinder | Type<br>**Normal** / Color / Both | Select the peaking type.<br>Normal: Normal peaking<br>Color: Color peaking<br>Both: "Normal" and "Color" |
| | Peaking Frequency<br>**Normal** / High | Select the peaking frequency between "Normal" and "High" when "Type" is set to "Normal." |
| | Color<br>**White** / Red / Yellow / Blue | When you select "Color" for "Type," select the color of the peaking signal. |
| | Peaking Level<br>Low / **Mid** / High | Set the color peaking level when "Type" is set to "Both." |
| **Marker**<br>Setting the markers added to pictures on the viewfinder screen<br>M | Setting<br>**On** / Off | Turn all marker indications on/off in combination. |
| | Safety Zone<br>**On** / Off | Turn the safety marker on/off. |
| | Safety Area<br>80% / **90%** / 92.5% / 95% | Select the size (ratio to the entire screen) of the safety zone marker. |
| | Center Marker<br>**On** / Off | Turn the center marker on/off. |
| | Aspect Marker<br>Line / Mask / **Off** | Select the aspect marker.<br>Line: To show white lines<br>Mask: To lower the video signal level of areas outside the marker range.<br>Off: To not display<br>**Note**<br>No aspect marker is displayed when a video format of EC (Edge Crop) is selected in SD Mode. |
| | Aspect Select<br>**4:3** / 13:9 / 14:9 / 15:9 / 1.66:1 / 1.85:1 / 2.35:1 / 2.4:1 | Select the ratio of the aspect marker. |
| | Aspect Mask<br>90% / 80% / 70% / 60% / 50% / 40% / 30% / 20% / 10% / **0%** | When "Aspect Marker" is "Mask," select the brightness of images outside the aspect marker. |
| | Guide Frame<br>On / **Off** | Turn the guide frame marker on/off. |

| VF SET | | |
|---|---|---|
| **Menu items** | **Subitems and setting values** | **Contents** |
| **Zebra**<br>Setting the zebra pattern<br>M | Zebra Select<br>**1** / 2 / Both | Select the zebra pattern(s) to be displayed.<br>1: To display only Zebra1 (the default is 70%) for an area within ±10% of the "Zebra1 Level" video level.<br>2: To display only Zebra2 (the default is 100%) for a video level over 100%.<br>Both: To display both zebra 1 and zebra 2 |
| | Zebra1 Level<br>50 to 107 (**70**) | Set the display level of zebra 1. |

| VF SET | | |
|---|---|---|
| **Menu items** | **Subitems and setting values** | **Contents** |
| **Display On/Off**<br>Selecting the items to be displayed on the viewfinder screen<br>M | Video Level Warnings<br>**On** / Off | Turn the warning indication to be displayed when the picture is too bright or too dark on/off. |
| | Sending Clip Info<br>**On** / Off | Turn the uploading status of a clip when connecting the CBK-WA100 Wireless Adapter on/off. |
| | Brightness Display<br>On / **Off** | Turn the numeric indication to show the picture brightness on/off. |
| | Histogram Display<br>On / **Off** | Turn the histogram indication to show the level distribution of the picture on/off. |
| | Lens Info<br>Meter / Feet / **Off** | Select the depth-of-field indication.<br>Meter: To indicate in meters<br>Feet: To indicate in feet<br>Off: To not indicate |
| | Zoom Position<br>**Number** / Bar / Off | Select the type of zoom position indication.<br>Number: Indication with a number<br>Bar: Indication with a bar<br>Off: To not display |
| | Audio Level Meter<br>**On** / Off | Turn the audio level meter indication on/off. |
| | Timecode<br>**On** / Off | Turn the time data (timecode, user bits, duration) indication on/off. |
| | Battery Remain<br>**On** / Off | Turn the battery remaining/DC input voltage indication on/off. |
| | Media Remain<br>**On** / Off | Turn the media remaining indication on/off. |
| | TLCS Mode<br>**On** / Off | Turn the TLCS mode indication on/off. |
| | Steady Shot<br>**On** / Off | Turn the steady shot mode indication on/off. |
| | Focus Mode<br>**On** / Off | Turn the focus operation mode indication on/off. |
| | White Balance Mode<br>**On** / Off | Turn the white balance mode indication on/off. |
| | Picture Profile<br>**On** / Off | Turn the Picture Profile indication on/off. |
| | Filter Position<br>**On** / Off | Turn the ND filter setting indication on/off. |
| | Iris Position<br>**On** / Off | Turn the iris setting indication on/off. |
| | Gain Setting<br>**On** / Off | Turn the gain setting indication on/off. |
| | Shutter Setting<br>**On** / Off | Turn the shutter mode and speed indication on/off. |
| | Rec Mode<br>**On** / Off | Turn the special recording mode (Frame Rec, Interval Rec, S&Q Motion) indication on/off. |
| | Video Format<br>**On** / Off | Turn the video format indication on/off. |
| | Clip Name<br>**On** / Off | Turn the clip name display on/off. |

| VF SET | | |
|---|---|---|
| **Menu items** | **Subitems and setting values** | **Contents** |
| | ClipNumber (PB)<br>**On** / Off | Turn the clip number display on/off. |
| | SDI Rec Control<br>**On** / Off | Turn the synchronous recording display (the Rec2 display) on/off. |
| | Wide Conversion<br>**On** / Off | Turn the wide Conversion setting indication on/off. |
| | Wireless Status<br>**On** / Off | Turn the status of radio wave of the CBK-WA100 Wireless Adapter (not supplied) on/off. |
| | Ext Media Remain<br>**On** / Off | Turn the remaining time indication for the media of the CBK-WA100 Wireless Adapter (not supplied) on/off. |

## TC/UB SET Menu

| TC/UB SET<br>Menu items | Subitems and setting values | Contents |
|---|---|---|
| **Timecode**<br>Setting the timecode | Mode<br>**Preset** / Regen / Clock | Set the timecode mode.<br>Preset: To start the timecode from the specified value<br>Regen (regeneration): To continue the timecode during recording only. When you insert another SxS memory card, the camcorder starts next recording so that the timecode continues from the last recorded timecode on the card.<br>Clock: To use the current clock time as the timecode<br>**Notes**<br>• In Interval Recording, Frame Recording and Slow & Quick Motion Recording, if you set "Mode" to "Preset" the timecode advances in Rec Run mode regardless of the "Run" setting. If you set it to "Clock," the timecode advances in Regen mode.<br>• When the Picture Cache function *(page 51)* is active ("Setting" of "P.Cache Rec" is set to "On"), the timecode always advances in Free Run mode. When the Picture Cache Recording function is deactivated, the running mode is restored to the selected mode. |
| | Run<br>**Rec Run** / Free Run | Set the running mode when the timecode mode is set to "Preset."<br>Rec Run: To advance the timecode during recording only. The continuity of the timecode is maintained between clips in the sequence of recording as long as the SxS memory card is not changed. If you remove the memory card and record on another card, the timecode will not continue when you return the first card to the slot again.<br>Free Run: The timecode keeps advancing regardless of the state of recording to the SxS memory card. |
| | Setting | Set the timecode to a desired value. |
| | Reset<br>Execute / Cancel | Select "Execute" to reset the timecode to 00:00:00:00. |
| | TC Out<br>**Auto** / Generator | Select the timecode output.<br>Auto: To output the timecode generator value during recording, and the timecode reader value during playback.<br>Generator: To output the timecode generator value during recording or playback. |
| **Users Bit**<br>Setting the user bits | Mode<br>**Fix** / Date | Set the user bit mode.<br>Fix: To use a desired fixed value as the user bits<br>Date: To use the current date |
| | Setting | Set the user bits to a desired value. |

| TC/UB SET | | |
|---|---|---|
| **Menu items** | **Subitems and setting values** | **Contents** |
| **TC Format**<br>Setting the time code format | **DF** / NDF | Set the timecode format.<br>DF: Drop frame<br>NDF: Non drop frame<br>**Note**<br>The current video format/frame frequency determines whether the mode is fixed either to DF or NDF (see below), regardless of the TC Format setting. |

| Video formats | Frame setting | TC Format |
|---|---|---|
| 59.94i<br>59.94P<br>29.97P<br>23.98P 1)<br>SP 1440×1080/23.98P<br>HQ 1280×720/23.98P | 00 to 29 | DF/NDF switchable (Fixed to DF in Clock mode) |
| 23.98P<br>XAVC-I 1080/23.98P<br>HQ 1920×1080/23.98P<br>HQ 1440×1080/23.98P<br>HQ 1280×720/23.98P<br>HD422 50/1080/23.98P<br>HD422 50/720/23.98P | 00 to 23 2) | Fixed to NDF 3) |
| 50i<br>50P<br>25P | 00 to 24 | Fixed to NDF |

*1)* With DF, the frame digits can be set as desired in the range of 00 to 29.
With NDF, the frame at the beginning of recording is limited to 00, 05, 10, 15, 20, or 25.

*2)* The frame digits in "Setting" is limited to 00, 04, 08, 12, 16, and 20.
The frame at the beginning of recording is limited to 00, 04, 08, 12, 16, or 20.
As "23.98P Output" *(page 91)* in the VIDEO SET menu becomes 2-3 pull-down 59.94i when recording (or standing by to record) HQ 1920×1080/23.98P other than when "23.98PsF" is selected, the overlapping timecodes of frames output from the SDI OUT connector are renumbered from 00 to 29.

*3)* Even in Clock mode, the timecode is gradually shifted, because it is counted by NDF.
As output from the SDI OUT connector becomes 2-3 pulled-down video when recording (or standing by to record) HQ 1920×1080/23.98P and other than "23.98PsF" is selected for "23.98P Output" *(page 91)* in the VIDEO SET menu, fields are created in which overlapping timecodes are displayed on the screen.

## LENS File Menu

| LENS File<br>Menu items | Subitems and setting values | Contents |
|---|---|---|
| **Information**<br>Displaying the lens information | Lens ID | Displays the model name of the lens (only for lenses that support serial communication). |
| | L Manufacturer | Displays the manufacturer of the lens (only for lenses that support serial communication). |
| | Serial Number | Displays the serial number of the lens (only for lenses that support serial communication). |
| **Operation**<br>Operating the lens file | Display Mode<br>**Date&Time** / Model Name / Lens ID | Set the displayed item on the list box.<br>This setting returns to the default (“Date&Time”) when restarting the camcorder. |
| | Recall Mem<br>Execute / Cancel | Recall the lens file (internal memory). |
| | Store Mem<br>Execute / Cancel | Store the lens files (internal memory). |
| | Recall SxS<br>Execute / Cancel | Recall the lens file (SxS memory card). |
| | Store SxS<br>Execute / Cancel | Store the lens files (SxS memory card).<br>When a media in the active slot is write-protected, this item is grayed-out. |
| | Recall USB<br>Execute / Cancel | Recall the lens file that is stored on a USB memory.<br>When the camcorder is in FAT mode or a USB memory is not inserted, this item is grayed-out. |
| | Store USB<br>Execute / Cancel | Store the lens files onto a USB memory.<br>When the camcorder is in FAT mode or a USB memory is not inserted, this item is grayed-out. |
| | File ID<br>No Offset / Up to 16 characters | Assigns a name to the most recently loaded file. |
| | File Source | Displays the number of the selected lens file. |
| | Auto Recall<br>Off / On / **S.Number** | When the installed lens supports serial communication, specifies whether to automatically load that reference file.<br>Off: Do not use this function.<br>On: Load the reference for the model name and reflect the contents of the file.<br>S.Number: For lenses that support serial number communication, load the lens file that corresponds to the serial number and model name, and reflect the contents of that file. |

| LENS File | | |
|---|---|---|
| **Menu items** | **Subitems and setting values** | **Contents** |
| **Setting**<br>Setting the lens file | Lens No Offset<br>Execute / Cancel | Clear the lens file. |
| | M V Modulation<br>–99 to +99 (**±0**) | Adjust the V SAW shading. |
| | Lens Center H<br>–40 to **0** to +40 | Sets a center marker horizontal position in the lens file. |
| | Lens Center V<br>–40 to **0** to +40 | Sets a center marker vertical position in the lens file. |
| | Lens R Flare<br>–99 to +99 (**±0**) | Adjust the flare (R) of the lens. |
| | Lens G Flare<br>–99 to +99 (**±0**) | Adjust the flare (G) of the lens. |
| | Lens B Flare<br>–99 to +99 (**±0**) | Adjust the flare (B) of the lens. |
| | Lens W-R Offset<br>–99 to **±0** to +99 | Sets a R white balance compensation value in the lens file. |
| | Lens W-B Offset<br>–99 to **±0** to +99 | Sets a B white balance compensation value in the lens file. |
| | Shading Ch Sel<br>**Red** / Green / Blue | Selects the white shading compensation target. |
| | L R/G/B H Saw<br>–99 to **±0** to +99 | Sets a horizontal SAW white shading compensation value in the lens file. |
| | L R/G/B H Para<br>–99 to **±0** to +99 | Sets a horizontal parabola white shading compensation value in the lens file. |
| | L R/G/B V Saw<br>–99 to **±0** to +99 | Sets a vertical SAW white shading compensation value in the lens file. |
| | L R/G/B V Para<br>–99 to **±0** to +99 | Sets a vertical parabola white shading compensation value in the lens file. |
| **Auto FB Adjust**<br>Adjusting the flange focal length | Execute/Cancel | Select “Execute” to start the automatic adjustment of the flange focal length. |

## OTHERS Menu

| OTHERS<br>Menu items | Subitems and setting values | Contents |
|---|---|---|
| **All Reset**<br>Resetting to the factory status | Execute/Cancel | Select “Execute” to reset the camcorder to the factory status. |
| **Camera Data**<br>Storing/recalling the menu settings to an SxS memory card or USB flash drive | Store<br>Execute/Cancel | When you select “Execute” to store the setting values to an SxS memory card, the setup file is stored to one of the following directories.<br>For UDF:<br>\General\Sony\PRO\CAMERA\XDCAM\PMW_300/<br>For exFAT:<br>\XDROOT\General\Sony\PRO\CAMERA\XDCAM\PMW_300\<br>For FAT:<br>\SONY\PRO\CAMERA\XDCAM_EX\PMW_300\ |
| | Recall<br>Execute/Cancel | Select “Execute” to retrieve the setting values from an SxS memory card. |
| | All Save (USB)<br>Execute/Cancel | When you select “Execute” to store the setting values to a USB flash drive, the setup file is stored to the following directory.<br>/MSSONY/SONY/PRO/CAMERA/XDCAM/PMW_300/ |
| | All Load (USB)<br>Execute/Cancel | Select “Execute” to retrieve the setting values from a USB flash drive. |
| **Time Zone**<br>Setting the time difference | UTC –12:00 to +13:30 | Set the time-zone difference from UTC in steps of 30 minutes.<br>**Note**<br>The default setting is different among the sales areas.<br>United States and Canada: –5:00<br>Europe area: 0:00<br>Oceania: +10:00 |
| **Clock Set**<br>Setting the built-in clock | Date/Time | Set the current time and date. |
| | 12H/24H<br>12H / **24H** | Select the display mode of time.<br>12H: 12-hour mode<br>24H: 24-hour mode |
| | Date Mode<br>**YYMMDD** / MMDDYY / DDMMYY | Select the display mode of the date.<br>YYMMDD: In sequence of year, month, day<br>MMDDYY: In sequence of month, day, year<br>DDMMYY: In sequence of day, month, year |
| **Language**<br>Selecting the language for menus and messages | **English** / Chinese / Spanish / Portuguese / Russian / Indonesian | English: To display in English<br>Chinese: To display in Chinese<br>Spanish: To display in Spanish<br>Portuguese: To display in Portuguese<br>Russian: To display in Russian<br>Indonesian: To display in Indonesian<br>**Note**<br>The language of the menus and messages differs depending on the area. |

| OTHERS | | |
|---|---|---|
| **Menu items** | **Subitems and setting values** | **Contents** |
| **Assign Button**<br>Assigning functions to the assignable buttons | <1> to <8><br>Off / Marker / Last Clip DEL / ATW / ATW Hold / Rec Review / Rec / Picture Cache / Freeze Mix / Expanded Focus / Spotlight / Backlight / IR Remote / Shot Mark1 / Shot Mark2 / VF Mode / BRT Disp / Histogram / Lens Info / OK Mark / Clip Flag OK / Clip Flag NG / Clip Flag Keep / Clip Continuous Rec / Color Bars (Camera/Bars) / Handle Zoom<br><1> **Lens Info**<br><2> **BRT Disp**<br><3> **Histogram**<br><4> **Color Bars**<br><5> **Off**<br><6> **Off**<br><7> **Off**<br><8> **Off** | Assign a function to the ASSIGN buttons. (The selectable functions are shared.)<br>Off: No function<br>Marker: For turning the safety zone, center marker, aspect marker and guide frame functions on/off as a group<br>Last Clip DEL: For executing the last clip delete (retake) function<br>ATW: For turning the ATW function on/off<br>ATW Hold: For turning the ATW hold function on/off<br>Rec Review: For executing the recording review function<br>Rec: For starting/stopping recording<br>Picture Cache: For turning the Picture Cache Recording function on/off<br>Freeze Mix: For executing the freeze mix function<br>Expanded Focus: For turning the expanded focus function on/off<br>Spotlight: For enabling and disabling TLCS Spotlight mode<br>Backlight: For enabling and disabling TLCS Backlight mode<br>IR Remote: For activating/deactivating the IR Remote Commander<br>Shot Mark1: For adding shot mark 1 (HD Mode only)<br>Shot Mark2: For adding shot mark 2 (HD Mode only)<br>VF Mode: For switching the viewfinder screen between color and monochrome<br>BRT Disp: For turning the brightness level indication function on/off<br>Histogram: For turning the histogram indication function on/off<br>Lens Info: For switching the depth-of-field indication to “Off”/“Meter”/“Feet”<br>OK Mark: For adding or removing an OK mark (HD Mode only, not valid via the thumbnail screen)<br>Clip Flag OK: For enabling and disabling OK flags for clips during recording and playback (UDF/exFAT only)<br>Clip Flag NG: For enabling and disabling NG flags for clips during recording and playback (UDF/exFAT only)<br>Clip Flag Keep: For enabling and disabling Keep flags for clips during recording and playback (UDF/exFAT only)<br>Clip Continuous Rec: For turning the Clip Continuous Recording function on/off<br>Color Bars (BARS/CAM): For switching between the color bar and camera signal<br>Handle Zoom: For switching the zoom operation of the handle zoom |
| **Tally**<br>Setting the tally lamps | Front / Rear<br>**High** / Low / Off | Set the brightness of the tally lamp.<br>High: To brighten the lamp<br>Low: To dim the lamp<br>Off: To not light the lamp |
| **Hours Meter**<br>Displaying the hours meter | Hours (Sys) | The non-resettable accumulated time of use is displayed. |
| | Hours (Reset) | The resettable accumulated time of use is displayed. |
| | Reset<br>Execute/Cancel | Select “Execute” to reset the Hours (Reset) value to 0. |

| OTHERS | | |
|---|---|---|
| **Menu items** | **Subitems and setting values** | **Contents** |
| **IR Remote**<br>Activating/ deactivating the Remote Commander | On / **Off** | Set to "On" to activate remote control operations from the supplied IR Remote Commander.<br>**Note**<br>The setting automatically returns to "Off" when the camcorder is turned off. |
| **Battery Alarm**<br>Setting the low power alarm | Low BATT<br>5% / **10%** / 15% / ... / 45% / 50% | Set the battery level at which the Low BATT warning is generated (in steps of 5%). |
| | BATT Empty<br>3% to 7% (**3%**) | Set the battery level at which the BATT Empty warning is generated. |
| | DC Low Volt1<br>11.5 V to 13.5 V (**11.5 V**) | Set the DC IN voltage at which the DC Low Volt1 warning is generated. |
| | DC Low Volt2<br>11.0 V to 12.0 V (**11.0 V**) | Set the DC IN voltage at which the DC Low Volt2 warning is generated. |
| **Battery INFO**<br>Showing information regarding the battery pack (display only) | Type | The type (product name) is displayed. |
| | MFG Date | The date of manufacture is displayed. |
| | Charge Count | The accumulated number of times of charge/discharge is displayed. |
| | Capacity | The estimated total capacity of full charge is displayed. |
| | Voltage | The current output voltage is displayed. |
| | Remaining | The current remaining level is displayed. |
| **Genlock**<br>Setting Genlock operation | H Phase (HD)<br>–999 to +999 (±**0**) | Set the H phase (phase of the horizontal sync signal) of HD signal for Genlock operation. |
| | H Phase (SD)<br>–99 to +99 (±**0**) | Set the H phase (phase of the horizontal sync signal) of SD signal for Genlock operation. |
| **Direct Menu**<br>Setting the Direct menu function | All / **Part** / Off | All: All Direct menu operations are permitted.<br>Part: A part of Direct menu operations is permitted. The operation is limited depending on the GAIN, SHUTTER, or WHITE BAL switch setting.<br>Off: No Direct menu operation is permitted. |
| **Trigger Mode**<br>Setting for operating an external recording device connected via the i.LINK connector (FAT only)<br>M | Internal / **Both** / External | Internal: To activate recording start/stop operations only for an SxS memory card in a built-in slot.<br>Both: To activate recording start/stop operations both for an SxS memory card in a built-in slot and the external recording device connected via the i.LINK connector.<br>External: To activate recording start/stop operations only for the external recording device connected via the i.LINK connector. |
| **System** | Country<br>NTSC Area / NTSC(J) Area / PAL Area | Select the area of use and setup ON/OFF setting.<br>NTSC Area: Setup ON<br>NTSC(J) Area: Setup OFF<br>PAL Area: Setup OFF<br>**Note**<br>The default setting is different among the sales areas.<br>United States, Canada, and Brazil: "NTSC Area"<br>Other areas: "PAL Area" |

| OTHERS | | |
|---|---|---|
| **Menu items** | **Subitems and setting values** | **Contents** |
| | F.Sys.<br>**UDF** / exFAT / FAT | Switch the file system between UDF/exFAT/FAT. |
| | HD/SD<br>**HD** / SD | Switch between HD Mode and SD Mode for recording/playback. |
| | Format<br><br>• UDF HD Mode<br>Country: NTSC Area/NTSC(J) Area<br>**HD422 50/1080/59.94i**<br>HD422 50/1080/29.97P<br>HD422 50/1080/23.98P<br>HD422 50/720/59.94P<br>HD422 50/720/29.97P<br>HD422 50/720/23.98P<br>HQ 1920×1080/59.94i<br>HQ 1920×1080/29.97P<br>HQ 1920×1080/23.98P<br>HQ 1440×1080/59.94i<br>HQ 1440×1080/29.97P<br>HQ 1440×1080/23.98P<br>HQ 1280×720/59.94P<br>HQ 1280×720/23.98P<br>Country: PAL Area<br>**HD422 50/1080/50i**<br>HD422 50/1080/25P<br>HD422 50/720/50P<br>HD422 50/720/25P<br>HQ 1920×1080/50i<br>HQ 1920×1080/25P<br>HQ 1440×1080/50i<br>HQ 1440×1080/25P<br>HQ 1280×720/50P<br>• UDF SD Mode<br>Country: NTSC Area/NTSC(J) Area<br>DVCAM59.94i SQ<br>DVCAM59.94i EC<br>DVCAM29.97P SQ<br>DVCAM29.97P EC<br>**IMX50/59.94i SQ**<br>IMX50/59.94i EC<br>IMX50/29.97P SQ<br>IMX50/29.97P EC<br>Country: PAL Area<br>DVCAM50i SQ<br>DVCAM50i EC<br>DVCAM25P SQ<br>DVCAM25P EC<br>IMX50/50i SQ<br>IMX50/50i EC<br>IMX50/25P SQ<br>IMX50/25P EC | Select the video format for recording.<br><br>• exFAT Mode<br>Country: NTSC Area/NTSC(J) Area<br>XAVC-I 1080/59.94i<br>XAVC-I 1080/29.97P<br>XAVC-I 1080/23.98P<br>XAVC-I 720/59.94P<br>Country: PAL Area<br>XAVC-I 1080/50i<br>XAVC-I 1080/25P<br>XAVC-I 720/50P<br>• FAT HD Mode<br>Country: NTSC Area/NTSC(J) Area<br>**HQ 1920×1080/59.94i**<br>HQ 1440×1080/59.94i<br>SP 1440×1080/59.94i<br>HQ 1920×1080/29.97P<br>HQ 1440×1080/29.97P<br>HQ 1920×1080/23.98P<br>HQ 1440×1080/23.98P<br>SP 1440×1080/23.98P<br>HQ 1280×720/59.94P<br>HQ 1280×720/29.97P<br>HQ 1280×720/23.98P<br>Country: PAL Area<br>**HQ 1920×1080/50i**<br>HQ 1440×1080/50i<br>SP 1440×1080/50i<br>HQ 1920×1080/25P<br>HQ 1440×1080/25P<br>HQ 1280×720/50P<br>HQ 1280×720/25P<br>• FAT SD Mode<br>Country: NTSC Area/NTSC(J) Area<br>**DVCAM59.94i SQ**<br>DVCAM59.94i EC<br>DVCAM29.97P SQ<br>DVCAM29.97P EC<br>Country: PAL Area<br>**DVCAM50i SQ**<br>DVCAM50i EC<br>DVCAM25P SQ<br>DVCAM25P EC | **HD Mode**<br>• Bit rate<br>UDF: HD422 50 or HD420 HQ<br>FAT: HQ or SP<br>exFAT: XAVC-I<br>• Horizontal resolution<br>1920, 1440, or 1280<br>• Frame rate<br>23.98, 25, 29.97, 50, or 59.94<br>• Scan system<br>i (interlace) or P (progressive)<br>**SD Mode**<br>• Frame rate<br>25, 29.97, 50, or 59.94<br>• Scan system<br>i (interlace) or P (progressive)<br>• Aspect<br>SQ (Squeeze) or EC (Edge Crop) |

| OTHERS | | |
|---|---|---|
| **Menu items** | **Subitems and setting values** | **Contents** |
| **Clip**<br>Setting for clip name or deletion | Auto Naming<br>C**** / Title / **Plan** | Select the method to specify clip names.<br>C****: UDF/exFAT only<br>Title: To specify as desired by "Title Prefix"<br>Plan: To use a name specified in planning metadata (if no name is specified in planning metadata, the name specified by "Title Prefix" is used.) |
| | Title Prefix<br>**nnn_** (nnn=least three digits of the serial number)<br>(Max. 7 characters displayed) | Call the Character Set screen to set the title part (4 to 46 characters) of the clip names.<br>**Configuration of the Character Set screen**<br>Character selection area (3 lines):<br>To select a character to insert in the cursor position of the Title Prefix area.<br>!#$%()+,-.=@[]^_~0123456789<br>abcdefghijklmnopqrstuvwxyz<br>ABCDEFGHIJKLMNOPQRSTUVWXYZ<br>Cursor operation area (1 line):<br>Space: To change the character in the cursor position to a space<br>INS: To insert a space in the cursor position<br>DEL: To delete a character in the cursor position<br>←: To move the cursor to the left<br>→: To move the cursor to the right<br>ESC: To cancel the change and exit the Character Set screen<br>END: To validate the change and exit the Character Set screen<br>Title Prefix area (1 line):<br>For entering the title<br>**To set the title**<br>1 Using the joystick, select (highlight) a character in the character selection area to be entered in the cursor position of the Title Prefix area. Then press the SEL/SET button or the jog dial.<br>2 Repeat Step 1 for setting the title. (Use Space, INS, and DEL as required.)<br>3 When the title setting is completed, select END to exit the Character Set screen. |
| | Number Set<br>**0001** to 9999 | Set the second 4-numeric part of the clip name.<br>Set a five-digit number for a planning metadata file. |
| | Update<br>**Media(A)** / Media(B) | To update the managerial file on the SxS memory card in the selected slot.[1)] |
| | Last Clip DEL<br>Execute / Cancel | Select "Execute" to delete the last recorded clip. |
| | All Clips DEL<br>Execute / Cancel | Select "Execute" to delete all clips on the active SxS memory card.<br>**Note**<br>Clips to which you applied OK mark and clips that are locked cannot be deleted. |
| | Filter Clips<br>**OK** / NG / KP / None | Select from among "OK" (the OK flag), "NG" (the not good flag), "KP" (the keep flag), or "None" (for no flag) to filter displayed clips. (UDF/exFAT only) |
| | Lock All Clips<br>Execute/Cancel | Select "Execute" to protect all clips. (UDF/exFAT only) |

| OTHERS | | |
|---|---|---|
| **Menu items** | **Subitems and setting values** | **Contents** |
| | Unlock All Clips<br>Execute/Cancel | Select “Execute” to remove protection from all clips. (UDF/exFAT only) |
| | Index Picture Pos<br>0sec to 10sec (**0sec**) | Set the image for viewing thumbnails. This selects the time difference from the start of the clip. |
| | Find Mode<br>**Clip** / Rec Start | Set the action for when you press the PREV button/NEXT button. (UDF/exFAT only)<br>Clip: Move to the start of the current clip/next clip. (Pressing the PREV button from the start of a clip will move to the start of the previous clip.)<br>Rec Start: Move to the previous Rec Start Essence Mark/the next Rec Start Essence Mark. |
| **Copy All** 2)<br>Setting for collective copy of clips and/or General files | Clips | To copy all clips on an SxS memory card to the other. |
| | General Files | To copy all files in the General folder on an SxS memory card to the other. |
| | Clips&General | To copy all clips and files in the General folder on an SxS memory card to the other. |
| **Format Media**<br>Formatting SxS memory cards | Media(A)<br>Execute / Cancel | Select “Execute” to format the SxS memory card in slot A with the selected file system (UDF/exFAT/FAT). |
| | Media(B)<br>Execute / Cancel | Select “Execute” to format the SxS memory card in slot B with the selected file system (UDF/exFAT/FAT). |
| **Plan.Metadata**<br>Setting planning metadata | Load/Slot(A) or Load/Slot(B)<br>Execute / Cancel | To load planning metadata from the SxS memory card in slot A or B.<br>Selecting “Execute” displays the list of the planning metadata files stored on the SxS memory card in slot A or B. Specify a file, select “Load” then “Execute” for loading.<br>**Notes**<br>• The file list displays up to 64 files. Even if the total number of planning metadata files is 64 or less, all of the planning metadata files may not appear if the directory where they are located in the SxS memory card (General/Sony/Planning) contains 512 or more files.<br>• After you start loading, do not remove the SxS memory card until the completion message is displayed. |
| | Load/USB<br>(in UDF/exFAT mode only)<br>Execute / Cancel | Loads planning metadata from the USB flash drive connected to the USB connector (type A).<br>Select “Execute” to show the list of the planning metadata files stored in the USB flash drive and select a file to be loaded. |

| OTHERS | | |
|---|---|---|
| **Menu items** | **Subitems and setting values** | **Contents** |
| | Properties<br>Execute / Cancel | Select “Execute” to display the detailed information of the planning metadata loaded in the camcorder.<br>File Name: Filename<br>Assign ID: Assignment ID<br>Created: Time and date of creation<br>Modified: Time and date of most recent modification<br>Modified by: Name of person who modified the file<br>Title1: Title1 specified in file (clip name in ASCII format)<br>Title2: Title2 specified in file (clip name in UTF-8 format)<br>Material Gp: Number of material groups (groups of clips recorded using the same planning metadata)<br>Shot Mark1: Name defined for Shot Mark 1<br>Shot Mark2: Name defined for Shot Mark 2<br>When you select “File Name,” “Assign ID,” “Title1,” or “Title2” on the Planning Metadata Properties screen and then press the SEL/SET button or the jog dial, the selected item is displayed on the full screen, permitting you to check a long file or clip name at a glance.<br>**Note**<br>Names of shot marks cannot be displayed on the full screen even if you select “Shot Mark1” or “Shot Mark2.” |
| | Clear<br>Execute / Cancel | Select “Execute” to clear the planning metadata loaded in the camcorder. |
| | Clip Name Disp<br>**Title1 (ASCII)** / Title2 (UTF-8) | Select the display mode of the clip name specified in planning metadata.<br>**Note**<br>When both an ASCII format name and a UTF-8 format name are specified in planning metadata, the UTF-8 format string is used as the clip name. If only either ASCII-format name or UTF-8 format name is specified in planning metadata, the specified name is displayed regardless of the menu setting. |
| **Network**<br>Setting for network connections<br>**Note**<br>The IFU-WLM3 USB Wireless LAN Module is required.<br>This item is not available when using the CBK-WA100 Wireless Adapter. | DHCP<br>Enable / **Disable** | Select whether to acquire the IP address automatically from a DHCP server (“Enable”) or not (“Disable”). |
| | IP Address<br>0.0.0.0 to 255.255.255.255<br>(**192.168.1.10**) | Set the IP address when “DHCP” is set to “Disable.” |
| | Subnet Mask<br>0.0.0.0 to 255.255.255.255<br>(**255.255.255.0**) | Set the subnet mask when “DHCP” is set to “Disable.” |
| | Default Gateway<br>0.0.0.0 to 255.255.255.255<br>(**0.0.0.0**) | Set the default gateway when “DHCP” is set to “Disable.” |
| | User Name<br>(**admin**) | Set a desired user name in 1 to 31 alphanumeric characters. |
| | Password<br>(**pmw-300**) | Sets a password in 0 to 31 alphanumeric characters.<br>**Note**<br>Each password character is displayed as “ * ”. |
| | Set<br>Execute / Cancel | Confirms the “Network” settings.<br>Select “Execute” to confirm. |

| OTHERS<br>Menu items | Subitems and setting values | Contents |
|---|---|---|
| | MAC Address | Display the MAC address. |
| | Net Config Reset<br>Execute / Cancel | Reset the “Network” settings to the preset values.<br>Select “Execute” to reset. |
| **Wi-Fi**<br>Setting for Wi-Fi connection<br>**Note**<br>The IFU-WLM3 USB Wireless LAN Module is required.<br>This item is not available when using the CBK-WA100 Wireless Adapter. | Scan Networks<br>Execute / Cancel | Scan the available network connections when “Wi-Fi” is set to “Enable.”<br>**Note**<br>When using the IFU-WLM3 USB Wireless LAN Module, “Network Type” is not detected automatically. In this case, set either “Infra” or “Adhoc” for “Network Type.” |
| | SSID (Network connection name display)<br>Reset | Reset the network connection name to the default settings. |
| | Network Type<br>**Infra** / Adhoc | Select the connection mode.<br>Infra: Infrastructure mode<br>Adhoc: Ad hoc mode |
| | Ch<br>**1** to 11 | Set the wireless channel when “Network Type” is “Adhoc.” |
| | Authentication<br>When “Network Type” is “Infra”<br>**Open** / Shared / WPA / WPA2<br>When “Network Type” is “Adhoc”<br>**Open** / Shared | Select the network authentication.<br>Open: Open system authentication<br>Shared: Shared key authentication<br>WPA: WPA (Wi-Fi Protected Access) authentication<br>WPA2: WPA2 (Wi-Fi Protected Access 2) authentication |
| | Encryption<br>When “Authentication” is “Open” or “Shared”<br>**Disable** / WEP<br>When “Authentication” is “WPA” or “WPA2”<br>**Disable** / TKIP / AES | Select the type of data encryption.<br>Disable: Do not apply data encryption.<br>WEP: Apply WEP (Wired Equivalent Privacy)<br>TKIP: Apply TKIP (Temporal Key Integrity Protocol)<br>AES: Apply AES (Advanced Encryption Standard) |
| | WEP Key Index<br>**1** / 2 / 3 / 4 | Select the key index when “Encryption” is “WEP.” |
| | Input Select<br>When “Encryption” is “WEP”<br>**ASCII5** / ASCII13 / HEX10 / HEX26<br>When “Encryption” is “TKIP” or “AES”<br>ASCII8-63 / HEX64 | Select the input format depending on the network key (or security key).<br>ASCII5: Five characters ASCII format<br>ASCII13: 13 characters ASCII format<br>HEX10: 10 hexadecimal digits<br>HEX26: 26 hexadecimal digits<br>ASCII8-63: 8 to 63 characters ASCII 8-bit format<br>HEX64: 64 hexadecimal digits (characters) |
| | Key (network key) | Set the network key (or security key). |
| | Set<br>Execute / Cancel | Confirm the “Wi-Fi” settings when “Wi-Fi” is set to “Enable.”<br>Select “Execute” to confirm. |
| | Wi-Fi Status<br>■ ■ ■ Connecting (display only) | Display “Connecting” while connection is being attempted.<br>Display black squares to show the connection status by the number of squares during communication.<br>**Note**<br>When using the IFU-WLM3 USB Wireless LAN Module in the “Adhoc” mode, “Wi-Fi Status” is not displayed. |

| OTHERS | | |
|---|---|---|
| **Menu items** | **Subitems and setting values** | **Contents** |
| | Wireless Mode<br>802.11b / 802.11g / 802.11n | Display an IEEE802.11 standard. |
| | Wi-Fi<br>Enable / **Disable** | Select whether to enable or disable Wi-Fi connection. |
| | Wi-Fi Remote<br>On / **Off** | Select "On" when using the Wi-Fi remote commander.<br>**Note**<br>Unselectable when "Wi-Fi" is set to "Disable." |
| **Fan Control**<br>Setting the fan control mode | Setting<br>**Auto** / Off in Rec | Set the fan control mode.<br>Auto: Controls the fan automatically in response to changes in temperature.<br>Off in Rec: Turn off the fan while recording. (If temperature is excessively high, the fan is turned on automatically.) |
| **RM/USB A Sel**<br>Setting the target source for external power supply | Setting<br>**Off** / Remote / USB A | Set the target source for external power supply.<br>Off: Turns off this function.<br>Remote: REMOTE connector<br>USB A: USB connector (type A)<br>**Notes**<br>• When you set to "Remote" or "USB A," no signal can output from the VIDEO connector in this setting.<br>• When you set to "Remote" or "USB A," the character information cannot be output regardless of the "SDI/HDMI/ Video Out Super" setting. |
| **Version**<br>Showing the version of this unit | Vx.xx | The current software version of the camcorder is displayed. |
| **Version Up**<br>Updating this unit | Execute / Cancel | Select "Execute" to update the camcorder.<br>Use when updating is required.<br>**Note**<br>This item cannot be selected when no SxS memory card has been loaded. |
| **Menu Scroll**<br>Setting the menu scroll operation | **Normal** / Loop | Select the method for menu scrolling.<br>Normal: The cursor moves and stops at the top or the bottom.<br>Loop: The cursor continues moving up (jumping from the top to the bottom) or down (jumping from the bottom to the top). |

*1)* If recording/playback cannot be made with an SxS memory card because it has been operated with a device other than this camcorder, or for some other reason, updating the managerial file on the card may improve the situation.

*2)* When you copy an SxS memory card including multiple clips and files to another card with the same capacity, all the clips and files may not be copied completely to the end, depending on the usage conditions or memory properties.

# Connecting External Monitors and Recording Devices

To display recording/playback pictures on an external monitor, select the output signal and use an appropriate cable for the monitor to be connected.
Output signal from the camcorder can be recorded when a recording device is connected.
Regardless of whether the signal is HD or SD, the same status information and menus can be displayed on the external monitor as those on the viewfinder screen.
According to the signal fed to the monitor, set "SDI/HDMI/Video Out Super" *(page 90)* in the VIDEO SET menu to "On."
When outputting SD signals in HD Mode, select in advance the output mode (Squeeze, Letterbox, or Edge Crop) with "Down Converter" *(page 90)* in the VIDEO SET menu.

**Note**

SD signals down-converted for output have the following restrictions:
Images of 50P/50i/25P are output as PAL signals, those of 59.94P/59.94i/29.97P are output as NTSC signals, and those of 23.98P are output as 2-3 pulled-down NTSC signals.

## SDI OUT connector (BNC type)

The connector is set at the factory to output an HD SDI signal.
When you set the camcorder to SD Mode, the connector outputs an SD SDI signal.
Set "SDI/HDMI/i.LINK I/O Select" *(page 90)* in the VIDEO SET menu to "SD SDI & SD HDMI i" to output down-converted SD SDI signals for monitoring, even in HD Mode. The same settings are applied to SDI OUT1 and SDI OUT2.
Use a commercially available 75-ohm coaxial cable for connection.

### To start recording on an external device in synchronization

With HD SDI signal output selected, synchronized recording is possible by feeding a REC trigger signal to an external recording device connected via the SDI OUT connector. To enable synchronized recording, set "SDI Rec Control" *(page 91)* in the VIDEO SET menu to "HD SDI Remote I/F."

**Notes**

- If you set "SDI/HDMI/i.LINK I/O Select" in the VIDEO SET menu to other than "HD SDI & HD HDMI" or "SD SDI & SD HDMI i" and use the HDMI OUT connector and i.LINK (HDV/DV) connector, no signal will be output from the SDI OUT connector.
- When a connected external device does not correspond to a REC trigger signal, the device cannot be operated.

## HDMI OUT connector (Type A connector)

Signal output from this connector is enabled by setting "SDI/HDMI/i.LINK I/O Select" *(page 90)* in the VIDEO SET menu.
In HD Mode, you can select HD HDMI, SD HDMI interlace, or SD HDMI Progressive output.
In SD Mode, only an SD HDMI interlace signal can be output.
Use a commercially available HDMI cable for connection.

## VIDEO OUT connector (BNC type)

By changing the setting of "SDI/HDMI/i.LINK I/O Select" *(page 90)* in the VIDEO SET menu, you can output HD-Y signals in HD Mode or down-converted SD analog composite signals for monitoring in SD Mode.
Use a commercially available BNC cable for connection.

## i.LINK (HDV/DV) connector (IEEE1394, 4-pin)

Input/output of an HDV or DVCAM stream can be enabled by changing "SDI/HDMI/i.LINK I/O Select" *(page 90)* in the VIDEO SET menu.
To set the input, select "i.LINK" in "Input Source Select" *(page 90)* in the VIDEO SET menu.
A monitor or VTR that supports i.LINK can be connected.

*For details on i.LINK connection, see "Connecting via i.LINK (FAT only)" (page 112).*

### AUDIO OUT CH-1/CH-2 connectors (RCA type)

These connectors output 2-channel audio signal currently being recorded/played back.
Use an optional audio cable for connection.

# Operating Clips With a Computer

### To use the ExpressCard slot of a computer

If the computer is equipped with an ExpressCard/34 or ExpressCard/54 slot, you can directly insert the SxS memory card containing clips recorded with this camcorder and access to the files.

**Notes**

- The SxS Device Driver Software and the UDF Driver Software must be downloaded and installed on your computer. For details, see *"Software Downloads" (page 145)*.
- Operation is not guaranteed with all computers.
- Before operating clips (or using the SBAC-US20 SxS Memory Card USB Reader/Writer (optional)), set the SxS memory card to the read-only mode and make a backup copy to a computer to protect data.

*For support information for the driver, visit the following URL:*

http://www.sony.net/SxS-Support/

With a Windows computer, check that a Removable Disk appears in My Computer. This indicates normal status.
With a Macintosh computer, an icon is displayed on the menu bar.

### To connect with a USB cable

When you connect the camcorder or the SBAC-US20 SxS Memory Card USB Reader/Writer (optional) using the supplied USB cable, the memory card in the slot is acknowledged as an extended drive by the computer.
When two memory cards are mounted in this camcorder, they are acknowledged as two independent extended drives by the computer.

**Note**

The camcorder does not work on the bus power from the computer. Supply the operating power.

### To check the connection to the camcorder

**1 Set the power switch to ON to turn on the camcorder.**

A message prompting you to confirm that you wish to enable the USB connection is displayed on the viewfinder screen.

**Note**

This message will not be displayed while another confirmation message or in-progress message (e.g., for formatting or restoration of an SxS memory card) is shown on the screen. It appears when formatting or restoration is completed. The message is also not displayed while the CLIP INFO screen is shown on the screen. It appears when an operation on the CLIP INFO screen is completed or you return to the thumbnail screen.

**2 Select "Execute" by using the joystick or the jog dial.**

**3 With Windows, check that the memory card is displayed as a removable disk in My Computer.**
**With Macintosh, check that a "NO NAME" or "Untitled" folder was created on the desktop. (The Macintosh folder name can be changed.)**

**Notes**

- The following operations must be eliminated when the access lamp is lit in red.
  —Turning the power off or disconnecting the power cord
  —Removing the SxS memory card
  —Disconnecting the USB cable
- Operation is not guaranteed with all computers.
- Use the supplied USB cable for connection.

## Removing an SxS memory card

### Windows

1. Click on the icon of "Safely Remove Hardware" on the task bar of the computer.
2. Select "Safely remove SxS Memory Card - Drive(X:)" from the displayed menu.
3. Check that the Safe To Remove Hardware message appears then remove the card.

### Macintosh

Drag the SxS memory card icon on the desktop to Trash.
If the SxS memory card icon is located on Finder, click on the eject icon on its side.

**Note**

Do not select "Card Power Off" from the SxS memory card icon displayed on the menu bar.

## Using the application software

To copy clips to the local disk of your computer, the dedicated application software must be downloaded and installed on your computer. For details, see *"Software Downloads" (page 145)*. Although the data regarding recorded materials are stored over multiple files and folders, you can easily handle the clips without considering such data and directory structure by using the dedicated application software.

**Note**

If you operate, e.g. copy the clips on the SxS memory card by using the Explorer (Windows) or Finder (Macintosh), the subsidiary data contained by the clips may not be maintained.

## Using a nonlinear editing system

For a nonlinear editing system, optional editing software that corresponds to the recording formats used with this camcorder is required. Store the clips to be edited on the HDD of your computer in advance, using the dedicated application software.

# Connecting via i.LINK (FAT only)

When an HDV-compatible video format (SP 1440×1080/59.94i, SP 1440×1080/50i, or SP 1440×1080/23.98P) or a DVCAM-compatible video format (format of SD Mode) is selected, setting "SDI/HDMI/i.LINK I/O Select" *(page 90)* in the VIDEO SET menu to "HDV" or "DVCAM" enables signal inputs/outputs via the i.LINK (HDV/DV) connector.
You can record the same images as those recorded on an SxS memory card in this camcorder on an external device connected to the i.LINK (HDV/DV) connector, or record playback pictures of the external device on the memory card in the camcorder.
DVCAM stream audio is only available in 48 kHz 16-bit 2-channel lock audio format.

**Notes**

- Use the i.LINK (HDV/DV) connector only for one-to-one i.LINK connection.
- When you change a setting which affects output signals from the i.LINK (HDV/DV) connector, such as "System" in the OTHERS menu or "SDI/HDMI/i.LINK I/O Select" and "Down Converter" in the VIDEO SET menu, disconnect the i.LINK cable then change the setting. Changing such a setting with the i.LINK cable connected may cause improper operation of the connected i.LINK device.

i.LINK and i are trademarks.

## Recording the Camcorder Picture on an External Device

While recording (or standing by to record), the picture being shot with this camcorder is output as an HDV or DVCAM stream via the i.LINK (HDV/DV) connector. It can be recorded on a connected HDV or DVCAM recorder in synchronization with the REC START/STOP operation on this camcorder.

**1 Perform the preparatory settings of the camcorder.**

- "SDI/HDMI/i.LINK I/O Select" *(page 90)* in the VIDEO SET menu
- "Trigger Mode" *(page 102)* in the OTHERS menu

**2 Set the external device to recording standby status.**

**3 Start recording with the camcorder.**

The external device starts recording in synchronization.

The status of the external device is displayed in the i.LINK status indication area *(page 16)* on the viewfinder screen.

| Indication | Status of the external device |
|---|---|
| STBY i HDV | In HDV recording standby |
| ●REC i HDV | In HDV recording |
| STBY i DV | In DV recording standby |
| ●REC i DV | In DV recording |

**Notes**

- Operation may be different depending on the type of external device.
- There is some time lag from when you start recording until the i.LINK status indication changes. Recording does not start on the connected i.LINK device before it enters synchronization even if "Trigger Mode" is set to "Both."
- While you can record shot marks on the memory card during recording, they are not added to the pictures recorded on the external device.

## Nonlinear Editing

When the camcorder is displaying thumbnails or in playback mode, you can transfer an HDV stream to a nonlinear editing system connected via the i.LINK (HDV/DV) connector.

**Notes**

- The i.LINK (HDV/DV) connector of this camcorder is a 4-pin connector. Check the number of pins of the i.LINK connector on your computer and use an appropriate i.LINK cable.
- In searching pictures of this camcorder on the computer, it may take some time until the display is reflected on the computer.
- If the playback clip is short or the playback starting point is near the end of the clip, the i.LINK signal may be interrupted between the clip and the next clip. When you try to capture such a signal using the nonlinear editing system, a malfunction may occur, depending on the nonlinear editing software in use.
- If you specify a search speed other than 4, 15, or 24 times normal with the nonlinear editing system, no i.LINK signal is fed out. In such a case, the picture on the viewfinder screen may stay frozen.
- High-speed playback picture may not be displayed on the computer screen, depending on the nonlinear editing software in use.

### Setting on this camcorder

Set "SDI/HDMI/i.LINK I/O Select" *(page 90)* in the VIDEO SET menu to "HDV" or "DVCAM."

## Recording External Input Signals

The input from a device connected via the i.LINK (HDV/DV) connector can be recorded on an SxS memory card in this camcorder. The timecodes superimposed on the i.LINK input are recorded regardless of the settings of the camcorder.

**1 Set the external signal to a format that can be recorded on the camcorder.**

Depending on the video format *(page 103)* setting of this unit, recordable input signals are as follows:

- FAT HD Mode
  SP 1440×1080/59.94i or SP 1440×1080/23.98P: HDV stream signal of 1440×1080/59.94i
  SP 1440×1080/50i: HDV stream signal of 1440×1080/50i
- FAT SD Mode
  DVCAM59.94i, 29.97P SQ/EC: DVCAM stream signal of 720×480/59.94i
  DVCAM50i, 25P SQ/EC: DVCAM stream signal of 720×576/50i

Other video formats and combination of input signals cannot be recorded.

**2 Set "SDI/HDMI/i.LINK I/O Select" *(page 90)* in the VIDEO SET menu to "HDV."**

**3 Set "Input Source Select" *(page 90)* in the VIDEO SET menu to "i.LINK."**

The input image is displayed on the viewfinder screen and the monitor connected via the VIDEO OUT connector.
The audio signal is output from the built-in speaker, headphones connected to the headphone connector, and the speaker of the monitor connected to the AUDIO OUT connector.

**4 Press the REC START/STOP button (*page 11*, *15*).**

Recording begins.

**Notes**

- An error is generated in the following cases. In such a case, cancel Recording mode by pressing the REC START/STOP button.
  —The video format of input signal does not match that specified on the camcorder.
  —A copy-protected stream is being fed in.
- If the input to the camcorder becomes no signal during recording, the tally lamps and the i.LINK ●REC status indication on the viewfinder screen flash, indicating that no signal is being recorded on the SxS memory card.
  When an input signal is resumed, recording is restarted, incrementing the clip number on the memory card.

# External Synchronization

When multiple units of the camcorder are used in the same shooting location, recording can be made in synchronization with a specific reference signal, and the timecode can be matched among all the units.

## Aligning the phase of the video signal (Genlock)

Genlock operation is enabled by supplying a reference signal to the GENLOCK IN connector *(page 12)* of the camcorder.
Valid reference signals depend on the video format selected.

### For "NTSC/NTSC(J) Area"

**UDF**

| Video format | Valid reference signal |
|---|---|
| HD422 50/1080/59.94i | 1080/59.94i<br>NTSC |
| HQ 1920×1080/59.94i | |
| HQ 1440×1080/59.94i | |
| HD422 50/1080/29.97P | |
| HQ 1920×1080/29.97P | |
| HQ 1440×1080/29.97P | |
| HD422 50/1080/23.98P (23.98P Output: 59.94i (2-3 Pull Down)) | |
| HQ 1920×1080/23.98P (23.98P Output: 59.94i (2-3 Pull Down)) | |
| HQ 1440×1080/29.97P (23.98P Output: 59.94i (2-3 Pull Down)) | |
| HD422 50/1080/23.98P (23.98P Output: 23.98PsF) | 1080/23.98PsF<br>NTSC |
| HQ 1920×1080/23.98P (23.98P Output: 23.98PsF) | |
| HQ 1440×1080/29.97P (23.98P Output: 23.98PsF) | |
| HD422 50/720/59.94P | 1080/59.94i<br>720/59.94P<br>NTSC |
| HQ 1280×720/59.94i | |
| HD422 50/720/29.97P | |
| HD422 50/720/23.98P | |
| HQ 1280×720/23.98P | |
| DVCAM 59.94i SQ/EC | 1080/59.94i<br>NTSC |
| DVCAM 29.97P SQ/EC | |
| IMX50/59.94i SQ/EC | |
| IMX50/29.97P SQ/EC | |

**exFAT**

| Video format | Valid reference signal |
|---|---|
| XAVC-I 1080/59.94i | 1080/59.94i<br>NTSC |
| XAVC-I 1080/29.97P | |
| XAVC-I 1080/23.98P (23.98P Output: 59.94i (2-3 Pull Down)) | |
| XAVC-I 1080/23.98P (23.98P Output: 23.98PsF) | 1080/23.98PsF<br>NTSC |
| XAVC-I 720/59.94P | 1080/59.94i<br>720/59.94P<br>NTSC |

**FAT**

| Video format | Valid reference signal |
|---|---|
| HQ 1920×1080/59.94i | 1080/59.94i<br>NTSC |
| HQ 1920×1080/29.97P | |
| HQ 1920×1080/23.98P (23.98P Output: 59.94i(2-3 Pull Down)) | |
| HQ 1920×1080/23.98P (23.98P Output: 23.98PsF) | 1080/23.98PsF<br>NTSC |
| HQ 1440×1080/59.94i | 1080/59.94i<br>NTSC |
| HQ 1440×1080/29.97P | |
| HQ 1440×1080/23.98P (23.98P Output: 59.94i(2-3 Pull Down)) | |
| HQ 1440×1080/23.98P (23.98P Output: 23.98PsF) | 1080/23.98PsF<br>NTSC |
| SP 1440×1080/59.94i | 1080/59.94i<br>NTSC |
| SP 1440×1080/23.98P | |
| HQ 1280×720/59.94P | 1080/59.94i<br>720/59.94P<br>NTSC |
| HQ 1280×720/29.97P | |
| HQ 1280×720/23.98P | |
| DVCAM59.94i SQ/EC | 1080/59.94i<br>NTSC |
| DVCAM29.97P SQ/EC | |

### For "PAL Area"

**UDF**

| Video format | Valid reference signal |
|---|---|
| HD422 50/1080/50i | 1080/50i<br>PAL |
| HQ 1920×1080/50i | |
| HQ 1440×1080/50i | |
| HD422 50/1080/25P | |
| HQ 1920×1080/25P | |
| HQ 1440×1080/25P | |
| HD422 50/720/50P | 1080/50i<br>720/50P<br>PAL |
| HQ 1280×720/50P | |
| HD422 50/720/25P | |

| Video format | Valid reference signal |
|---|---|
| DVCAM50i SQ/EC | 1080/50i<br>PAL |
| DVCAM25P SQ/EC | |
| IMX50/50i SQ/EC | |
| IMX50/25P SQ/EC | |

**exFAT**

| Video format | Valid reference signal |
|---|---|
| XAVC-I 1080/50i | 1080/50i<br>PAL |
| XAVC-I 1080/25P | |
| XAVC-I 720/50P | 1080/50i<br>720/50P<br>PAL |

**FAT**

| Video format | Valid reference signal |
|---|---|
| HQ 1920×1080/50i | 1080/50i<br>PAL |
| HQ 1920×1080/25P | |
| HQ 1440×1080/50i | |
| HQ 1440×1080/25P | |
| SP 1440×1080/50i | |
| HQ 1280×720/50P | 1080/50i<br>720/50P<br>PAL |
| HQ 1280×720/25P | |
| DVCAM50i SQ/EC | 1080/50i<br>PAL |
| DVCAM25P SQ/EC | |

The phase adjustment for the reference signal can also be made with "Genlock" *(page 102)* in the OTHERS menu.

**Notes**

- When the output format is SD mode and you use one of the video formats below, genlock is not possible. Set the video format to HD mode.
  UDF: HD422 50/720/59.94P, HQ 1280×720/59.94P, HD422 50/720/50P, HQ 1280×720/50P
  exFAT: XAVC-I 720/59.94P, XAVC-I 720/50P
  FAT: HQ 1280×720/59.94P, HQ 1280×720/50P
- If the reference signal is unstable, genlock is not possible.
- The subcarrier is not synchronized.

## Synchronizing the timecode of your camcorder with that of another unit

Set the unit that supplies the timecode to a mode in which the timecode output keeps advancing (Free Run or Clock mode).

**1 Set "Timecode" in the TC/UB SET menu as follows:**

Mode: Preset
Run: Free Run

**2 Press the DURATION/TC/U-BIT button *(page 11)* so that the timecode is displayed on the screen.**

**3 Confirm that the TC IN/OUT switch *(page 12)* is set to IN, then supply an HD or SD reference video signal to the GENLOCK IN connector and the reference timecode to the TC IN connector.**

The built-in timecode generator of your camcorder locks to the reference timecode, and the message "EXT-LK" is displayed on the screen.
About 10 seconds after locking, even if the reference timecode from the external device is disconnected, the external lock will be kept.

**Notes**

- Check that the reference timecode and the reference video signal are in a phase relation that complies the SMPTE timecode standards.
- When you finish the above procedure, the timecode is immediately synchronized with the external timecode, and the time data indication will show the value of the external timecode. However, wait for a few seconds until the timecode generator stabilizes before recording.
- If the frequency of the reference video signal and the frame frequency are not the same, a lock cannot be acquired, and the camcorder will not operate properly. In such a case, the timecode will not be correctly locked to the external timecode.
- When the connection is removed, the timecode advance may shift one frame per hour with respect to the reference timecode.

### To release the external timecode synchronization

Change the "Timecode" setting in the TC/UB SET menu, or set the camcorder to OFF.
External synchronization is also released when you start recording in a special recording mode (Slow & Quick Motion, Frame Rec, or Interval Rec).

## Synchronizing the timecode of another unit with that of your camcorder

**1 Specify the timecode of your camcorder with "Timecode" and "TC Format" *(page 46)*.**

**2 Confirm that the TC IN/OUT switch *(page 12)* is set to OUT, then connect the TC OUT connector and VIDEO OUT connector *(page 12)* with the timecode input and reference signal input of the other unit, respectively.**

The timecode to be output from the TC OUT connector depends on the setting of "TC Out" in "Timecode" in the TC/UB SET menu. If "TC Out" is set to "Generator," the timecode generated by the timecode generator of the camcorder is output during recording and playback. If "TC Out" is set to "Auto," the timecode generated by the timecode generator is output during recording, and that superimposed with the video signal is output during playback.

# Operating via the REMOTE Connector

When the optional RM-B170 Remote Control Unit is connected, various settings of the camcorder can be performed from the remote control device.

**Note**

RM-B750 cannot be used.

## Connection

Before connection, set "RM/USB A Sel" *(page 108)* in the OTHERS menu to "Remote."

**Notes**

- No signal can output from the VIDEO connector in this setting.
- The character information cannot be output regardless of the "SDI/HDMI/Video Out Super" setting.

Using the remote cable (10 m) supplied with the remote control device, connect between the REMOTE connector of the camcorder and the camera connector of the remote control device. When you turn on the camcorder after the connection, the camcorder enters Remote Control mode.

## Adjusting the camcorder from the Remote Control Unit

Turn on the camcorder by setting the power switch to ON.
The Picture Profile function is activated, automatically selecting Picture Profile 6.
From this status, you can perform menu and recording operations by using the switches or controls of the Remote Control Unit.

*For the functions that can be controlled from the Remote Control Unit, see "Functions Operable via the REMOTE Connector" on page 118.*

**Notes**

- Remote Control operations cannot be made if USB connection to the camcorder is enabled.
- Do not connect or disconnect the Remote Control Unit when the camcorder is on.
- The following controls of the camcorder becomes inoperative when the Remote Control Unit is connected.

—GAIN switch
—WHITE BAL switch
—SHUTTER switch
—BARS/CAM button
—WHT BAL button
—FULL AUTO button

- Direct menu operation of the camcorder is disabled when the Remote Control Unit is connected.
- The ECS frequency value displayed on the Remote Control Unit may slightly differ from that on the camcorder.

### Releasing Remote Control mode

Turn off the camcorder and disconnect the remote control device.
The settings on the controls on the camcorder become valid.

## Operating the Menus of the Camcorder

In Remote Control mode, PP (the icon for the Picture Profile menu) is displayed at the bottom with the Setup menu icons, enabling you select the Picture Profile menu from this screen.

**Note**

The menu items that cannot be set in Remote Control mode are shaded and cannot be selected.

### Operating the menu from the RM-B170

Set the power switch to ON in advance.

1. **Set the DISPLAY switch to MENU.**
   The menu of the camcorder appears on the monitor screen connected via the MONITOR connector of the RM-B170.
2. **Select and set the menu items using the MENU SELECT knob and the CANCEL/ENTER switch.**
3. **When the settings are completed, set the DISPLAY switch to ON or OFF to exit the menu.**

*For details on operations of the RM-B170, refer to the Operation Manual of the RM-B170.*

### Operating the Slow & Quick Motion recording from the Remote Control Unit

When the Remote Control Unit is connected, selection of "S&Q Motion" is enabled on the CAMERA SET menu, and you can perform Slow & Quick Motion recording from the Remote Control Unit.
Before starting Slow & Quick Motion recording, make the necessary settings on the menu.

1. **Select "S&Q Motion" from the CAMERA SET menu.**
2. **Set "Setting" to "On."**
   The camcorder enters Slow & Quick Motion mode.
3. **Select the frame rate for recording with "Frame Rate."**
4. **Press the VTR/START STOP button.**
   Slow & Quick Motion recording begins.

**To stop recording**
Press the VTR/START STOP button.

**To cancel Slow & Quick Motion mode**
Set "Setting" of "S&Q Motion" of the CAMERA SET menu to "Off."

## Functions Operable via the REMOTE Connector

The following functions can be made using the controls or the switches on the Remote Control Unit.

### RM-B170

| Function | Operation on the camcorder | Operation on the RM-B170 |
|---|---|---|
| Menu ON/OFF | MENU button | yes |
| Master gain selection | GAIN switch | yes |
| Gain adjustment | CAMERA SET menu → Gain Setup | yes |
| Step gain selection | | yes |
| Color bar signal output ON/OFF | CAM/BAR button | yes |
| Shutter ON/OFF | SHUTTER switch + CAMERA SET menu → Shutter | yes |
| Shutter speed selection | CAMERA SET menu → Shutter | yes |
| ECS ON/OFF | SHUTTER switch + CAMERA SET menu → Shutter | yes |
| ECS frequency selection | CAMERA SET menu → Shutter | yes |
| Auto white balance | AUTO W BAL button | yes |
| Auto black balance | CAMERA SET menu → Auto BLK Balance | yes |
| White R/B level adjustments | | yes |
| Black R/B level adjustments | | yes |
| White balance memory selection | WHITE BAL switch | yes |
| Auto Tracing White ON/OFF | Assignable button (with "ATW" assigned) | yes |
| Recording start/stop | REC START/STOP button | yes |
| Rec Review | REC REVIEW button (PMW-300K1)<br>RET button (PMW-300K2) | yes |
| Rec Review stop | STOP button | yes |
| Call signal ON/OFF[1)] | | yes |
| Recording shot mark 1 | SHOTMARK 1 button | yes |
| Recording shot mark 2 | SHOTMARK 2 button | yes |
| Freeze mix indication ON/OFF | Assignable button<br>(Freeze Mix function assigned) | yes |

*1)* When you press the CALL button on the RM-B170, the message "CALL" is displayed in the viewfinder of the camcorder.

## Adjustments of the lens functions

When the supplied or optional exclusive lens is used, the following functions can also be controlled from the Remote Control Unit.

### RM-B170

| Function | Operation on the lens | Operation on the RM-B170 |
|---|---|---|
| Focus adjustment[1)] | Focus ring | yes |
| Zoom operation[1)] | Zoom ring | yes |
| Iris adjustment | Iris ring | yes |
| Iris close | | |
| Switching between auto iris and manual iris | IRIS switch | yes |

*1)* When the function is adjusted/operated on the RM-B170, adjustment/operation on the camcorder is disabled.

## Adjustments of the Picture Profiles

The Picture Profile menu of the camcorder can be operated from the Remote Control Unit in the same manner as on the camcorder. In addition, some items of the Picture Profile menu can also be adjusted by using the menus or controls of the Remote Control Unit.

*For details on operations of the remote control device, refer to the Operation Manual of the device.*

**Notes**

- The following menu and knob/switch operations on the Remote Control Unit are enabled when the menu of the camcorder is not displayed.
  The changes becomes valid and reflected on the Picture Profile menu.
- If the control knobs on the Remote Control Unit is set to Absolute mode, the corresponding items cannot be changed on the Picture Profile menu.

### RM-B170

| Picture Profile item | | Operation on the RM-B170 |
|---|---|---|
| Matrix | Setting | yes |
| | Level | yes |
| | R-G, R-B, G-R, G-B, B-R, B-G | yes |
| Detail | Setting | yes |
| | Level | yes |
| | Frequency | yes |
| | Crispening | yes |
| | H/V Ratio | yes |
| | White Limiter | yes |
| | Black Limiter | yes |
| | Knee APT Level | yes |
| Skin Tone Detail | Setting | yes |
| | Level | yes |
| | Area Indication | yes |
| | Saturation | yes |
| | Phase | yes |
| | Width | yes |
| Knee | Setting | yes |
| | Auto Knee | yes |
| | Point | yes |
| | Slope | yes |
| | Knee SAT Level | yes |
| Gamma | Level | yes |
| | Select | yes |
| Black | | yes |
| Black Gamma | | yes |
| Low Key SAT | | yes |

# Important Notes on Operation

## Use and Storage

### Do not subject the unit to severe shock

- The internal mechanism may be damaged or the body warped.
- If an accessory mounted on the accessory shoe is subjected to severe shock, the accessory shoe may be damaged. In such a case, stop using it and contact your dealer or a Sony service representative.

### Do not cover the unit while operating

Putting a cloth, for example, over the unit can cause excessive internal heat build-up.

### After use

Always set the power switch to OFF.

### Before storing the unit for a long period

Remove the battery pack.

### Grip the handle when carrying

Grip the handle to carry. If you carry it by other parts, such as the front microphone block or the viewfinder block, the camcorder may drop, causing injury.

### Do not leave the camcorder with the lenses facing the sun

Direct sunlight can enter through the lenses, be focused in the camcorder, and cause fire.

## Shipping

- Remove the memory cards before transporting the unit.
- If sending the unit by truck, ship, air or other transportation service, pack it in the shipping carton of the unit.

## Care of the unit

Remove dust and dirt from the surfaces of the lens using a blower.
If the body of the unit is dirty, clean it with a soft, dry cloth. In extreme cases, use a cloth steeped in a little neutral detergent, then wipe dry. Do not use organic solvents such as alcohol or thinner, as these may cause discoloration or other damage to the finish of the unit.

### In the event of operating problems

If you should experience problems with the unit, contact your Sony dealer.

## The fan is consumable parts that will need periodic replacement

The fan is consumable parts that will need periodic replacement.
When operating at room temperature, a normal replacement cycle will be about 5 to 7 years. However, this replacement cycle represents only a general guideline and does not imply that the life expectancy of these parts is guaranteed. For details on parts replacement, contact your dealer.

## Use and storage locations

Store in a level, ventilated place. Avoid using or storing the unit in the following places:

- In excessive heat or cold (operating temperature range: 0ºC to 40ºC or 32ºF to 104ºF)
  Remember that in summer in warm climates the temperature inside a car with the windows closed can easily exceed 50ºC (122ºF).
- In damp or dusty locations
- Locations where the unit may be exposed to rain
- Locations subject to violent vibration
- Near strong magnetic fields
- Close to radio or TV transmitters producing strong electromagnetic fields.
- In direct sunlight or close to heaters for extended periods

### To prevent electromagnetic interference from portable communications devices

The use of portable telephones and other communications devices near this unit can result in malfunctions and interference with audio and video signals.
It is recommended that the portable communications devices near this unit be powered off.

### Note on laser beams

Laser beams may damage the CMOS image sensors. If you shoot a scene that includes a laser beam, be careful not to let the laser beam be directed into the lens of the camcorder.

## About the LCD panels

The LCD panel fitted to this unit is manufactured with high precision technology, giving a functioning pixel ratio of at least 99.99%. Thus a very small proportion of pixels may be "stuck", either always off (black), always on (red, green, or blue), or flashing. In addition, over a long period of use, because of the physical characteristics of the liquid crystal display, such "stuck" pixels may appear spontaneously. These problems are not a malfunction. Note that any such problems have no effect on recorded data.

## On condensation

If the unit is suddenly taken from a cold to a warm location, or if ambient temperature suddenly rises, moisture may form on the outer surface of the unit and/or inside of the unit. This is known as condensation. If condensation occurs, turn off the unit and wait until the condensation clears before operating the unit. Operating the unit while condensation is present may damage the unit.

## Phenomena specific to CMOS image sensors

The following phenomena that may appear in images are specific to CMOS (Complementary Metal Oxide Semiconductor) image sensors. They do not indicate malfunctions.

### White flecks

Although the CMOS image sensors are produced with high-precision technologies, fine white flecks may be generated on the screen in rare cases, caused by cosmic rays, etc.
This is related to the principle of CMOS image sensors and is not a malfunction.

The white flecks especially tend to be seen in the following cases:

- when operating at a high environmental temperature
- when you have raised the master gain (sensitivity)
- when operating in Slow-Shutter mode

### Aliasing

When fine patterns, stripes, or lines are shot, they may appear jagged or flicker.

### Flicker

If recording is made under lighting produced by discharge tubes, such as fluorescent, sodium, or mercury-vapor lamps, the screen may flicker, colors may vary, or horizontal stripes may appear distorted.

In such cases, set the Flicker-Reduction function to Auto mode *(page 45)*.
In some cases, such phenomena may not be improved with the Flicker-Reduction function.
It is recommend to set the electronic shutter speed to 1/100 sec. in 50-Hz areas and to 1/60 in 60-Hz areas.

### Focal plane

Owing to the characteristics of the pickup elements (CMOS sensors) for reading video signals, subjects that quickly move across the screen may appear slightly skewed.

### Flash band

The luminance at the top and bottom of the screen may change when shooting a flashlight beam or a light source that quickly flashes.

## Note on the viewfinder screen

Pictures on the viewfinder screen may be distorted by the following operations:

- Changing the video format
- Rec Review
- Starting playback from the Thumbnail screen
- Reversing the viewfinder
- Switching the Expanded Focus display

## Fragmentation

If pictures cannot be recorded/reproduced properly, try formatting the recording medium. While repeating picture recording/playback with a certain recording medium for an extended period, files in the medium may be fragmented, disabling proper recording/storage. In such a case, make a backup of clips in the medium then perform formatting of the medium using "Format Media" *(page 105)* in the OTHERS menu.

# Formats and Limitations of Outputs

## Video Formats and Output Signals

### Output formats for the SDI OUT connector

Serial digital signals from the SDI OUT connector are output depending on the settings of the setup menu and format of the clip being played.
The output format is converted when using the settings in the following chart.

**Notes**

- When the format is UDF HD Mode, exFAT Mode, or FAT HD Mode and "SDI/HDMI/i.LINK I/O Select" in the VIDEO SET menu is set to "SD SDI & SD HDMI i," a down-converted SD signal is output.
- When "SDI/HDMI/i.LINK I/O Select" in the VIDEO SET menu is set to other than "HD SDI & HD HDMI" or "SD SDI & SD HDMI i," signals are not output from the SDI OUT connector.

#### While recording (or standing by to record)/During clip playback

| When recording: "Format" in "System" in the OTHERS menu<br>When playing: Playback clip video format | Output format | |
|---|---|---|
| | Setting of "SDI/HDMI/i.LINK I/O Select" in the VIDEO SET menu | |
| | HD SDI & HD HDMI | SD SDI & SD HDMI i |
| HD422 50/1080/23.98P<br>XAVC-I 1080/23.98P<br>HQ 1920×1080/23.98P<br>HQ 1440×1080/23.98P<br>(23.98P Output:59.94i (2-3 Pull Down)) | 1920×1080/59.94i 1) | SD/59.94i 1) |
| SP 1440/23.98P | 1920×1080/59.94i 1) | SD/59.94i 1) |
| HD422 50/720/59.94P<br>XAVC-I 720/59.94P<br>HQ 1280×720/59.94P | 1280×720/59.94P | SD/59.94i 2) |
| HD422 50/720/29.97P<br>HQ 1280×720/29.97P | 1280×720/59.94P 3) | SD/29.97PsF |
| HD422 50/720/23.98P<br>HQ 1280×720/23.98P | 1280×720/59.94P 4) | SD/59.94i 1) |
| HD422 50/720/50P<br>XAVC-I 720/50P<br>HQ 1280×720/50P | 1280×720/50P | SD/50i 5) |
| HD422 50/720/25P<br>HQ 1280×720/25P | 1280×720/50P 6) | SD/25PsF |

1) 59.94i provided through 2-3 pulldown of 23.98P.
2) 59.94i provided through conversion from 59.94P.
3) 59.94P provided by outputting each frame of 29.97P two times.
4) 59.94P provided by repeating each frame of 23.98P two or three times.
5) 50i provided through conversion from 50P.
6) 50P provided by outputting each frame of 25P two times.

### When a thumbnail screen is displayed

| "Format" in "System" in the OTHERS menu | Output format | |
|---|---|---|
| | Setting of "SDI/HDMI/i.LINK I/O Select" in the VIDEO SET menu | |
| | HD SDI & HD HDMI | SD SDI & SD HDMI i |
| HD422 50/1080/23.98P<br>XAVC-I 1080/23.98P<br>HQ 1920×1080/23.98P<br>HQ 1440×1080/23.98P<br>(23.98P Output:59.94i (2-3 Pull Down)) | 1920×1080/59.94i 1) | SD/59.94i |
| HD422 50/720/50P<br>XAVC-I 720/50P<br>HQ 1280×720/50P | 1280×720/50P | SD/50i 2) |

1) 59.94i provided through 2-3 pulldown of 23.98P.
2) 50i provided through conversion from 50P.

## Output formats from the HDMI OUT connector

Serial digital signals from the HDMI OUT connector are output depending on the settings of the setup menu and format of the clip being played.
The output format is converted when using the settings in the following chart.

**Note**

When the format is UDF HD Mode, exFAT Mode, or FAT HD Mode and "SDI/HDMI/i.LINK I/O Select" in the VIDEO SET menu is set to "SD SDI & SD HDMI i," a down-converted SD signal is output.

### While recording (or standing by to record)/During clip playback

| When recording: "Format" in "System" in the OTHERS menu<br>When playing: Playback clip video format | Output format | | |
|---|---|---|---|
| | Setting of "SDI/HDMI/i.LINK I/O Select" in the VIDEO SET menu | | |
| | HD SDI & HD HDMI<br>HD HDMI & HDV | SD SDI & SD HDMI i<br>SD HDMI i & HDV<br>SD HDMI i & DVCAM | SD HDMI P & HDV<br>SD HDMI P |
| HD422 50/1080/23.98P<br>XAVC-I 1080/23.98P<br>HQ 1920×1080/23.98P<br>HQ 1440×1080/23.98P<br>(23.98P Output:<br>59.94i (2-3 Pull Down)) | 1920×1080/59.94i 1) | SD/59.94i 1) | SD/59.94P |
| SP 1440/23.98P 2) | 1920×1080/59.94i 1) | SD/59.94i 1) | |
| HD422 50/720/59.94P<br>XAVC-I 720/59.94P<br>HQ 1280×720/59.94P | 1280×720/59.94P | SD/59.94i 3) | |
| HD422 50/720/29.97P<br>HQ 1280×720/29.97P | 1280×720/59.94P 4) | SD/29.97PsF | |
| HD422 50/720/23.98P<br>HQ 1280×720/23.98P | 1280×720/59.94P 5) | SD/59.94i 1) | |
| HD422 50/720/50P<br>XAVC-I 720/50P<br>HQ 1280×720/50P | 1280×720/50P | SD/50i 6) | SD/50P |
| HD422 50/720/25P<br>HQ 1280×720/25P | 1280×720/50P 7) | SD/25PsF | |

1) 59.94i provided through 2-3 pulldown of 23.98P.
2) While recording (or standing by to record) only.
3) 59.94i provided through conversion from 59.94P.

*4)* 59.94P provided by outputting each frame of 29.97P two times.
*5)* 59.94P provided by repeating each frame of 23.98P two or three times.
*6)* 50i provided through conversion from 50P.
*7)* 50P provided by outputting each frame of 25P two times.

### When a thumbnail screen is displayed

| "Format" in "System" in the OTHERS menu | Output format | | |
|---|---|---|---|
| | Setting of "SDI/HDMI/i.LINK I/O Select" in the VIDEO SET menu | | |
| | HD SDI & HD HDMI<br>HD HDMI & HDV | SD SDI & SD HDMI i<br>SD HDMI i & HDV<br>SD HDMI i & DVCAM | SD HDMI P & HDV<br>SD HDMI P |
| HD422 50/1080/23.98P<br>XAVC-I 1080/23.98P<br>HQ 1920×1080/23.98P<br>HQ 1440×1080/23.98P<br>(23.98P Output:<br>59.94i (2-3 Pull Down)) | 1920×1080/59.94i 1) | SD/59.94i | SD/59.94P |

*1)* 59.94i provided through 2-3 pulldown of 23.98P.

## Output formats from the VIDEO OUT connector

Signals output from the VIDEO OUT connector are either the HD-Y signals output from the SDI OUT connector/HDMI OUT connector (when outputting HD from the SDI OUT connector or HDMI OUT connector), or analog composite signals (when outputting SD from the SDI OUT connector or HDMI OUT connector).
Signals of clips recorded in a different system from the setting of "Country" in "System" in the OTHERS menu are converted to the following frame rates for simplified playback before output.

### When you play clips recorded with the PAL system while the "Country" is set to "NTSC Area/NTSC(J) Area."

Some frames may be repeated due to frame rate conversion.

| Playback clip video format | VIDEO OUT Output format | |
|---|---|---|
| | HD-Y | Analog composite |
| HD422 50/1080/50i<br>XAVC-I 1080/50i<br>HQ 1920×1080/50i<br>HQ 1440×1080/50i<br>SP 1440×1080/50i | 1920×1080/60i | SD/59.94i |
| HD422 50/1080/25P<br>XAVC-I 1080/25P<br>HQ 1920×1080/25P<br>HQ 1440×1080/25P | 1920×1080/30PsF | SD/29.97PsF |
| HD422 50/720/50P<br>XAVC-I 720/50P<br>HQ 1280×720/50P | 1280×720/60P | SD/59.94i |
| HD422 50/720/25P<br>HQ 1280×720/25P | | SD/29.97PsF |
| DVCAM50i SQ/EC | Cannot be played | Cannot be played |
| DVCAM25P SQ/EC | | |
| IMX50/50i SQ/EC | | |
| IMX50/25P SQ/EC | | |

### When you play clips recorded with the NTSC system while the “Country” is set to “PAL Area.”

Some frames may be deleted due to frame rate conversion.

| Playback clip video format | VIDEO OUT Output format | |
|---|---|---|
| | HD-Y | Analog composite |
| HD422 50/1080/59.94i<br>XAVC-I 1080/59.94i<br>HQ 1920×1080/59.94i<br>HQ 1440×1080/59.94i<br>SP 1440×1080/59.94i | 1920×1080/49.95i | SD/50i |
| HD422 50/1080/29.97P<br>XAVC-I 1080/29.97P<br>HQ 1920×1080/29.97P<br>HQ 1440×1080/29.97P | 1920×1080/24.97PsF | SD/25PsF |
| HD422 50/1080/23.98P<br>XAVC-I 1080/23.98P<br>HQ 1920×1080/23.98P<br>HQ 1440×1080/23.98P<br>SP 1440×1080/23.98P | | |
| HD422 50/720/59.94P<br>XAVC-I 720/59.94P<br>HQ 1280×720/59.94P | 1280×720/49.95P | SD/50i |
| HD422 50/720/29.97P<br>HQ 1280×720/29.97P | | SD/25PsF |
| HD422 50/720/23.98P<br>HQ 1280×720/23.98P | | |
| DVCAM59.94i SQ/EC | Cannot be played | Cannot be played |
| DVCAM29.97P SQ/EC | | |
| IMX50/59.94i SQ/EC | | |
| IMX50/29.97P SQ/EC | | |

## Output formats from the i.LINK I/O connector

Serial digital signals from the i.LINK I/O connector are output in the following formats depending on the settings of the setup menu and format of the clip being played.

**Note**

When "SDI/HDMI/i.LINK I/O Select" in the VIDEO SET menu is set to "HD SDI & HD HDMI," "SD SDI & SD HDMI i," or "SD HDMI P," signals are not output from the i.LINK I/O connector.

### While recording (or standing by to record)/When playing a clip

| When recording: "Format" in "System" in the OTHERS menu<br>When playing: Playback clip video format | Output format | |
|---|---|---|
| | Setting of "SDI/HDMI/i.LINK I/O Select" in the VIDEO SET menu | |
| | HD HDMI & HDV<br>SD HDMI i & HDV<br>SD HDMI P & HDV | SD HDMI i & DVCAM |
| HQ 1920×1080/59.94i<br>HQ 1440×1080/59.94i | No signal | SD/59.94i |
| HQ 1920×1080/29.97P<br>HQ 1440×1080/29.97P | | SD/29.97PsF |
| HQ 1920×1080/23.98P<br>HQ 1440×1080/23.98P | | No signal |
| SP 1440×1080/59.94i | 1440×1080/59.94i | SD/59.94i |
| SP 1440×1080/23.98P | 1440×1080/59.94i 1) | SD/59.94i 1) |
| HQ 1280×720/59.94P | No signal | SD/59.94i 2) |
| HQ 1280×720/29.97P | | SD/29.97PsF |
| HQ 1280×720/23.98P | | No signal |
| DVCAM59.94i SQ/EC | | SD/59.94i |
| DVCAM29.97P SQ/EC | | SD/29.97PsF |
| HQ 1920×1080/50i<br>HQ 1440×1080/50i | No signal | SD/50i |
| HQ 1920×1080/25P<br>HQ 1440×1080/25P | | SD/25PsF |
| SP 1440×1080/50i | 1440×1080/50i | SD/50i |
| HQ 1280×720/50P | No signal | SD/50i 3) |
| HQ 1280×720/25P | | SD/25PsF |
| DVCAM50i SQ/EC | | SD/50i |
| DVCAM25P SQ/EC | | SD/25PsF |
| IMX50/50i SQ/EC | | |
| IMX50/25P SQ/EC | | |

*1)* 59.94i provided through 2-3 pulldown of 23.98P.
*2)* 59.94i provided through conversion from 59.94P.
*3)* 50i provided through conversion from 50P.

## Limitations of Inputs/Outputs

The outputs from the camcorder are limited by the menu settings as follows:

×: no signal

| Menu setting | | | Output | | | | Input |
|---|---|---|---|---|---|---|---|
| System | | SDI/HDMI/ i.LINK I/O Select | SDI OUT | HDMI OUT | i.LINK | VIDEO OUT | i.LINK |
| F.Sys. | HD/SD | | | | | | |
| UDF/exFAT | HD | HD SDI & HD HDMI | HD | HD | × | HD-Y | × |
| | | SD SDI & SD HDMI i | SD | SD | × | Composite | × |
| | | HD HDMI & HDV | × | × | × | × | × |
| | | SD HDMI i & HDV | × | × | × | × | × |
| | | SD HDMI P & HDV | × | × | × | × | × |
| | | SD HDMI i & DVCAM | × | × | × | × | × |
| | | SD HDMI P | × | SD-P | × | × | × |
| | | Off | × | × | × | Composite | × |
| FAT | HD/HQ | HD SDI & HD HDMI | HD | HD | × | HD-Y | × |
| | | SD SDI & SD HDMI i | SD | SD | × | Composite | × |
| | | HD HDMI & HDV | × | × | × | × | × |
| | | SD HDMI i & HDV | × | × | × | × | × |
| | | SD HDMI P & HDV | × | × | × | × | × |
| | | SD HDMI i & DVCAM | × | SD | DVCAM | Composite | DVCAM |
| | | SD HDMI P | × | SD-P | × | × | × |
| | | Off | × | × | × | Composite | × |
| | HD/SP | HD SDI & HD HDMI | HD | HD | × | HD-Y | × |
| | | SD SDI & SD HDMI i | SD | SD | × | Composite | × |
| | | HD HDMI & HDV | × | HD | HDV | HD-Y | HDV |
| | | SD HDMI i & HDV | × | SD | HDV | Composite | HDV |
| | | SD HDMI P & HDV | × | SD-P | HDV | × | HDV |
| | | SD HDMI i & DVCAM | × | SD | DVCAM | Composite | × |
| | | SD HDMI P | × | × | × | × | × |
| | | Off | × | × | × | Composite | × |

| Menu setting | | | Output | | | | Input |
|---|---|---|---|---|---|---|---|
| System | | SDI/HDMI/ i.LINK I/O Select | SDI OUT | HDMI OUT | i.LINK | VIDEO OUT | i.LINK |
| F.Sys. | HD/SD | | | | | | |
| UDF | SD | HD SDI & HD HDMI | × | × | × | × | × |
| | | SD SDI & SD HDMI i | SD | SD | × | Composite | × |
| | | HD HDMI & HDV | × | × | × | × | × |
| | | SD HDMI i & HDV | × | × | × | × | × |
| | | SD HDMI P & HDV | × | × | × | × | × |
| | | SD HDMI i & DVCAM | × | × | × | × | × |
| | | SD HDMI P | × | × | × | × | × |
| | | Off | × | × | × | Composite | × |
| FAT | | HD SDI & HD HDMI | × | × | × | × | × |
| | | SD SDI & SD HDMI i | SD | SD | × | Composite | × |
| | | HD HDMI & HDV | × | × | × | × | × |
| | | SD HDMI i & HDV | × | × | × | × | × |
| | | SD HDMI P & HDV | × | × | × | × | × |
| | | SD HDMI i & DVCAM | × | SD | DVCAM | Composite | DVCAM |
| | | SD HDMI P | × | × | × | × | × |
| | | Off | × | × | × | Composite | × |

# Saving and Loading Lens Files

## Setting Lens File Data

Set the data in lens files in "LENS File" in the setup menu *(page 98)*.
You can set the following data and save it as a lens file.

| Setting data | Sub-items |
|---|---|
| V modulation shading compensation values | M V Modulation |
| Center marker position | Lens Center H<br>Lens Center V |
| Flare level | Lens R Flare<br>Lens G Flare<br>Lens B Flare |
| White balance compensation value | Lens W-R Offset<br>Lens W-B Offset |
| White shading compensation value | L R/G/B H Saw<br>L R/G/B H Para<br>L R/G/B V Saw<br>L R/G/B V Para |

*See "Basic Menu Operations" (page 79) for details on menu operations.*

### Saving Lens Files

Insert an SxS memory card into a memory card slot, or connect a USB memory to the USB connector (type A), then proceed as follows.

*See "Basic Menu Operations" (page 79) for information about menu operations.*

1 **Select "LENS File" in the setup menu.**

2 **Select "Store Mem," "Store SxS," or "Store USB" by using the joystick or the jog dial, then press the SEL/SET button or jog dial.**
Select "Store Mem" if you want to save the data in the camcorder's internal memory, select "Store SxS" if you want to save the data on an SxS memory card, or select "Store USB" if you want to save the data on a USB memory.

3 **To execute the save, select "Execute," then press the SEL/SET button or jog dial.**
**To cancel the save, select "Cancel," then press the SEL/SET button or jog dial.**
If you select "Execute," a list box of lens file number appears. File numbers where "No File" is displayed are empty file numbers.

4 **Select the file number under which you want to save the data, then press the SEL/SET button or jog dial.**
A confirmation message appears.

5 **To execute the save, select "Execute," then press the SEL/SET button or jog dial.**
**To cancel the save, select "Cancel," then press the SEL/SET button or jog dial.**
If you selected "Store SxS" in step 2, the ACCESS lamp lights in red when you execute the save.
When the data has been saved to the SxS memory card, a completion message appears and the ACCESS lamp goes out, or lights in green.

### Loading Lens Files

Insert an SxS memory card into a memory card slot, or connect a USB memory to the USB connector (type A), then proceed as follows.

*See "Basic Menu Operations" (page 79) for details on menu operations.*

1 **Select "LENS File" in the setup menu.**

2 **Select "Recall Mem," "Recall SxS," or "Recall USB" by using the joystick or the jog dial, then press the SEL/SET button or jog dial.**
Select "Recall Mem" if you want to load the file from the camcorder's internal memory, select "Recall SxS" if you want to load the file from an SxS memory card, or select "Recall USB" if you want to load the file from a USB memory.

3 **To execute the load, select "Execute," then press the SEL/SET button or jog dial.**
**To cancel the load, select "Cancel," then press the SEL/SET button or jog dial.**
If you select "Execute," a list box of lens files appears. File numbers where "No File" is displayed are empty file numbers.

4 **Select the desired file number, then press the SEL/SET button or jog dial.**
A confirmation message appears.

5 **To execute the load, select "Execute," then press the SEL/SET button or jog dial.**
**To cancel the load, select "Cancel," then press the SEL/SET button or jog dial.**
If you selected "Recall SxS" in step 2, the ACCESS lamp lights in red when you execute the load.
When the specified lens file has been loaded from the SxS memory card, a completion message appears and the ACCESS lamp goes out, or lights in green.

### Loading Lens Files Automatically

When you are using a lens that supports serial communication, you can set up the camcorder by automatically loading the lens file that corresponds to the lens settings (Lens Auto Recall function).
To use the Lens Auto Recall function, set "LENS File" > "Auto Recall" in the setup menu to one of the following.
**Off:** Do not use the Lens Auto Recall function.
**On (Lens Name):** Load the lens file that corresponds to the model name.
**On (Serial Number):** Load the lens file that corresponds to the model name and serial number (when the lens supports communication of the serial number).
If the lens does not support communication of the serial number, either "On" setting above will load the lens file that corresponds to the model name only.

## Backup Battery Replacement

This camcorder uses a backup battery to retain various setting data.
A lithium battery (CR2032) for backup is mounted in the camcorder at the factory.
The backup battery retains the date, time, and timecode in Free Run mode even when no operating power is being supplied.

### Service life of the backup battery

When the backup battery's voltage falls, the backup battery low-voltage warning appears on the viewfinder screen.
If this warning appears, replace the battery as soon as possible.

**WARNING**

- Battery may explode if mistreated. Do not recharge, disassemble, or dispose of in fire.
- Batteries shall not be exposed to excessive heat such as sunshine, fire or the like.

**CAUTION**

Danger of explosion if battery is incorrectly replaced. Replace only with the same or equivalent type recommended by the manufacturer.
When you dispose of the battery, you must obey the law in the relative area or country.

### Replacing the backup battery

**Notes**

- Be sure to set the power switch to OFF when replacing the backup battery.
- Be careful not to drop the removed screw into the camcorder.

1 **Remove the screw of the backup battery holder *(page 13)*, then remove the cover. Insert a nonmetalic item, such as a plastic toothpick, to the side of the battery and lever the battery out of its compartment.**
The backup battery holder is exposed when the breast pad is pulled out.

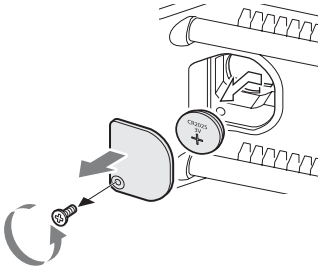


**2 Insert a new backup battery (CR2032) with the + symbol on the battery facing outside.**

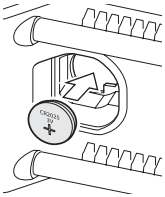


**3 Attach the cover in the original position.**

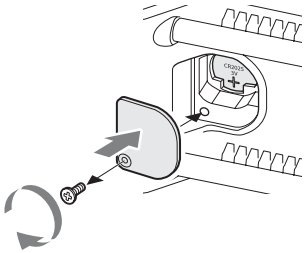

# Troubleshooting

## Power

| Symptoms | Cause | Remedy |
|---|---|---|
| The camcorder does not power on when you set the power switch to ON. | No battery pack is mounted and no power is supplied to the DC IN connector. | Mount a battery pack *(page 18)* or connect to AC power using the BC-U1 or BC-U2 *(page 19)*. |
| | The battery pack is completely exhausted. | Replace the battery pack with a fully charged one *(page 18)*. |
| The power supply cuts while operating. | The battery pack becomes exhausted. | Replace the battery pack with a fully charged one *(page 18)*. |
| The battery pack becomes exhausted very quickly. | The ambient temperature is very low. | This owes to the battery characteristics and is not a defect. |
| | The battery pack is inadequately charged. | Recharge the battery pack *(page 18)*.<br>If the battery pack is soon exhausted even after you charged it fully, it may comes to the end of its life. Replace it with a new one. |

## Recording/Playback

| Symptoms | Cause | Remedy |
|---|---|---|
| Recording does not start when you press the REC START/STOP button. | The power switch is set to OFF. | Set the power switch to ON. |
| | The SxS memory card is write-protected. | Release the write-protection, or replace the card with a non-protected SxS memory card. |
| | The SxS memory card is full. | Replace the card with one having sufficient space. |
| | The SxS memory card needs restoration. | Restore the memory card *(page 32)*. |
| Playback does not start when you press the PLAY button. | The power switch is set to OFF. | Set the power switch to ON. |
| The supplied IR Remote Commander does not work. | Remote control operation is disabled. | Enable remote control operation *(page 29)*. |
| | The battery of the IR Remote Commander is exhausted. | Replace the battery with a new one. |
| Audio recording is not possible. | The AUDIO LEVEL (CH-1/CH-2) controls are set to the minimum level. | Adjust the audio recording levels with the AUDIO LEVEL (CH-1/CH-2) controls *(page 47)*. |
| The recorded sound is distorted. | The audio level is too high. | Adjust the audio recording levels with the AUDIO LEVEL (CH-1/CH-2) controls *(page 47)*, and record again. |
| The recorded sound has a high noise level. | The audio level is too low. | Adjust the audio recording levels with the AUDIO LEVEL (CH-1/CH-2) controls *(page 47)*, and record again. |

## External Devices

| Symptoms | Cause | Remedy |
|---|---|---|
| The equipment connected to the camcorder via an i.LINK connection does not react as expected, for example, no picture appears on its screen. | It sometimes takes time for the connected equipment to recognize the operation. | Wait for about 15 seconds. If the connected equipment still does not react, do the following:<br>• Check the i.LINK cable, for example, by re-plugging it.<br>• Turn the power off, and connect the cable again.<br>• Change the i.LINK cable. |

# Error/Warning Indications

The camcorder informs you of situations where warning, caution, or an operation check is required, through messages on the viewfinder screen, the tally lamps, and a buzzer.
The buzzer is output to the built-in speaker or to the headphones connected via the headphone connector.
The buzzer volume can be set with "Alarm Level" in "Audio Output" *(page 89)* in the AUDIO SET menu.

## Error Indications

The camcorder stops operation after the following indications.

| Error indication on the viewfinder | Buzzer | Tally lamps | Cause and measures |
|---|---|---|---|
| E + Error code | Continuous | Rapidly flashing | The camcorder may be defective. Recording stops even if ●REC is displayed on the viewfinder screen.<br>Turn off the power and check the connected equipment, cables, and media. If they are not defective, turn on the power again. If the error persists, consult Sony service personnel.<br>(If power cannot be turned off by setting the power switch to OFF, remove both the battery pack or the DC IN source.) |

## Warning Indications

When one of the following indications is generated, follow the message to clear the problem.

| Warning indication on the viewfinder | Buzzer | Tally lamps | Cause and measures |
|---|---|---|---|
| Media Near Full | Intermittent | Flashing | Free space on the SxS memory card has become insufficient.<br>Replace it with another at the earliest opportunity. |
| Media Full | Continuous | Rapidly flashing | No space is left on the SxS memory card. Recording, clip copying and clip division cannot be performed.<br>Replace it with another. |
| Battery Near End | Intermittent | Flashing | The battery power will be exhausted soon.<br>Charge the battery pack at the earliest opportunity. |
| Battery End | Continuous | Rapidly flashing | The battery pack is exhausted. Recording cannot be performed.<br>Stop operation and change the battery pack. |
| Temperature High | Intermittent | Flashing | The internal temperature has risen above a safe operation limit.<br>Suspend operation, turn off the power, and wait until the temperature falls. |
| Voltage High | Continuous | Rapidly flashing | The DC IN voltage has become high.<br>Check the power supply. |
| Voltage Low | Intermittent | Flashing | The DC IN voltage has become low (stage 1).<br>Check the power supply. |
| Insufficient Voltage | Continuous | Rapidly flashing | The DC IN voltage is too low (stage 2). Recording cannot be performed.<br>Connect other power source. |
| HDD A[1)] Battery Near End | Intermittent | Flashing | The battery power of the connected HDD will be exhausted soon.<br>Change the battery at the earliest opportunity. |

| Warning indication on the viewfinder | Buzzer | Tally lamps | Cause and measures |
|---|---|---|---|
| HDD A[1] Battery End | Continuous | Rapidly flashing | The battery of the connected HDD is exhausted. Recording cannot be performed.<br>Stop operation to change the battery. |
| Battery Error<br>Please Change Battery | | | An error was detected with the battery pack.<br>Replace the battery pack with a normal one. |
| Backup Battery End<br>Please Change | | | The remaining power of the backup battery is insufficient.<br>Replace the battery with a new one. |
| Unknown Media(A)[2]<br>Please Change | | | A partitioned memory card or one that contains recorded clips exceeding the number permitted with this camcorder is loaded. This card cannot be used with this camcorder. Remove it and load a compatible card. |
| Media Error<br>Media(A)[2] Needs to be Restored | | | An error occurred with the memory card. The card requires restoration.<br>Remove the card, load it again, and restore it. |
| Media Error<br>Cannot Record to Media(A)[2] | | | Recording cannot be done, as the memory card is defective. As playback may be possible, it is recommended to replace it with another card after copying the clips, as required. |
| Media Error<br>Cannot Use Media(A)[2] | | | Neither recording nor playback can be done, as the memory card is defective.<br>It cannot be operated with this camcorder. Replace it with another card. |
| Will Switch Slots Soon | | | This is an advanced notice that the camcorder will switch from the current memory card to the other memory card for continuous recording. |
| No Clip | | | There are no clips in the memory card.<br>Check the selected card. |
| Cannot Use Media(A)[2]<br>Unsupported File System | | | A card of a different file system or an unformatted card was inserted. It cannot be used with this camcorder.<br>Replace it with another card or format it with this camcorder. |
| In This File System<br>Cannot Use Media(A)[2] | | | A memory card incompatible with the file system is inserted. Replace the card from the respective slot, format it with the camcorder, or change the “F.Sys.” setting. |
| Same File Already Exists<br>Change Media(A)[2] | | | A clip with the same name exists in the memory card to which you want to copy.<br>Replace the card from the respective slot with a different card. |
| Video Format Mismatch | | | The external signal input via the i.LINK connection cannot be recorded, as the “Format” setting is different from the signal format of the external input signal.<br>Change “Format” in “System” in the OTHERS menu to match it to that of the external signal. |
| Copy Protected Input<br>Cannot Record | | | The external signal input via the i.LINK connection cannot be recorded, as the stream is copy-protected.<br>Check the input signal. |
| Media Error<br>Playback Halted | | | An error occurred in reading data from the memory card, and playback cannot be continued.<br>If this frequently occurs, change the memory card after copying the clips, as required. |
| Media(A)[2] Error | | | Recording cannot be done, as an error occurred with the memory card.<br>If this frequently occurs, change the memory card. |

| Warning indication on the viewfinder | Buzzer | Tally lamps | Cause and measures |
|---|---|---|---|
| Media Reached<br>Rewriting Limit<br>Change Media (A)[2] | | | The memory card comes to the end of its service life. Make a backup copy and replace the card with another one as soon as possible. Recording/playback may not be performed properly if you continue to use the card.<br>*For details, refer to the operating instructions of the memory card.* |
| Reached Clip Number Limit<br>Copy Completed to xx/xx | | | The maximum number of clips for 1 memory card is reached, so copying cannot continue. (xx/xx indicates the completed copy operations.)<br>Replace the card. |
| Not Enough Capacity<br>Copy Completed to xx/xx | | | There is not enough capacity for copying. (xx/xx indicates the completed copy operations.)<br>Replace the card. |
| Reached Duplication Limit<br>Copy Completed to xx/xx | | | There are already 10 or more clips with the same name as the clip that you want to copy, so copying cannot continue. (xx/xx indicates the completed copy operations.)<br>Replace the card. |
| Copy Error!<br>(CANCEL:Abort)<br>No Media! | | | There is no memory card inserted in the slot.<br>Insert a card. |
| Copy Error!<br>(CANCEL:Abort)<br>Media Write Protected | | | The memory card is write-protected.<br>Remove the card from the slot and remove the write-protection. |
| Copy Error!<br>(CANCEL:Abort)<br>Cannot Use Media(A)[2] | | | A memory card that cannot be used with the camcorder is inserted.<br>Replace the card in the respective slot. |
| Copy General Files<br>NG: Cannot Copy | | | Copying of a general file failed.<br>Retry copying. |
| File System Mismatch | | | A memory card with an different file system is inserted.<br>Replace the card, format it with the camcorder, or change the “F.Sys.” setting. |

*1)* B for a HDD connected to slot B
*2)* (B) for the card in slot B

# Licenses

## MPEG-2 Video Patent Portfolio License

ANY USE OF THIS PRODUCT OTHER THAN CONSUMER PERSONAL USE IN ANY MANNER THAT COMPLIES WITH THE MPEG-2 STANDARD FOR ENCODING VIDEO INFORMATION FOR PACKAGED MEDIA IS EXPRESSLY PROHIBITED WITHOUT A LICENSE UNDER APPLICABLE PATENTS IN THE MPEG-2 PATENT PORTFOLIO, WHICH LICENSE IS AVAILABLE FROM MPEG LA, L.L.C., 250 STEELE STREET, SUITE 300, DENVER, COLORADO 80206.
“PACKAGED MEDIA” means any storage media storing MPEG-2 video information such as DVD movie which are sold/distributed to general consumers. Disc replicators or sellers of the PACKAGED MEDIA need to obtain licenses for their own business from MPEG LA. Please contact MPEG LA for any further information.
MPEG LA. L.L.C., 250 STEELE STREET, SUITE 300, DENVER, COLORADO 80206
http://www.mpegla.com

## Bitmap Fonts

This product uses RICOH Bitmap Fonts produced and sold by Ricoh Company, Ltd.

## About OpenSSL

Because it uses the OpenSSL Toolkit, this product uses software developed by the OpenSSL Project (http://www.openssl.org/).

OpenSSL License
---

```
/*
============================
=======
*    Copyright (c) 1998-2008 The OpenSSL
*    Project. All rights reserved.
*
*    Redistribution and use in source and
*    binary forms, with or without
*    modification, are permitted provided
*    that the following conditions are met:
*
*    1. Redistributions of source code must
*       retain the above copyright notice,
*       this list of conditions and the
*       following disclaimer.
*
*    2. Redistributions in binary form must
*       reproduce the above copyright
*       notice, this list of conditions and the
*       following disclaimer in the
*       documentation and/or other
*       materials provided with the
*       distribution.
*
*    3. All advertising materials mentioning
*       features or use of this software must
*       display the following
*       acknowledgment:
*       "This product includes software
*       developed by the OpenSSL Project
*       for use in the OpenSSL Toolkit.
*       (http://www.openssl.org/)"
*
*    4. The names "OpenSSL Toolkit" and
*       "OpenSSL Project" must not be used
*       to endorse or promote products
*       derived from this software without
*       prior written permission. For written
*       permission, please contact openssl-
*       core@openssl.org.
*
*    5. Products derived from this software
*       may not be called "OpenSSL" nor
*       may "OpenSSL" appear in their
*       names without prior written
*       permission of the OpenSSL Project.
*
*    6. Redistributions of any form
*       whatsoever must retain the following
*       acknowledgment:
*       "This product includes software
*       developed by the OpenSSL Project
*       for use in the OpenSSL Toolkit
*       (http://www.openssl.org/)"
*
*    THIS SOFTWARE IS PROVIDED BY
*    THE OpenSSL PROJECT ``AS IS''
*    AND ANY EXPRESSED OR IMPLIED
```

```
*    WARRANTIES, INCLUDING, BUT NOT
*    LIMITED TO, THE IMPLIED
*    WARRANTIES OF MERCHANTABILITY
*    AND FITNESS FOR A PARTICULAR
*    PURPOSE ARE DISCLAIMED. IN NO
*    EVENT SHALL THE OpenSSL
*    PROJECT OR ITS CONTRIBUTORS BE
*    LIABLE FOR ANY DIRECT, INDIRECT,
*    INCIDENTAL, SPECIAL, EXEMPLARY,
*    OR CONSEQUENTIAL DAMAGES
*    (INCLUDING, BUT NOT LIMITED TO,
*    PROCUREMENT OF SUBSTITUTE
*    GOODS OR SERVICES;
*    LOSS OF USE, DATA, OR PROFITS;
*    OR BUSINESS INTERRUPTION)
*    HOWEVER CAUSED AND ON ANY
*    THEORY OF LIABILITY, WHETHER IN
*    CONTRACT, STRICT LIABILITY, OR
*    TORT (INCLUDING NEGLIGENCE OR
*    OTHERWISE)
*    ARISING IN ANY WAY OUT OF THE
*    USE OF THIS SOFTWARE, EVEN IF
*    ADVISED OF THE POSSIBILITY OF
*    SUCH DAMAGE.
*

==========================
=======
*
*    This product includes cryptographic
*    software written by Eric Young
*    (eay@cryptsoft.com). This product
*    includes software written by Tim
*    Hudson (tjh@cryptsoft.com).
*
*    /

Original SSLeay License
-----------------------

*    Copyright (C) 1995-1998 Eric Young
*    (eay@cryptsoft.com)
*    All rights reserved.
*
*    This package is an SSL
*    implementation written by Eric Young
*    (eay@cryptsoft.com).
*    The implementation was written so as
*    to conform with Netscapes SSL.
*
*    This library is free for commercial and
*    non-commercial use as long as the
*    following conditions are aheared to.
*    The following conditions apply to all
*    code found in this distribution, be it the
*    RC4, RSA, lhash, DES, etc., code; not
*    just the SSL code. The SSL
*    documentation included with this
*    distribution is covered by the same
*    copyright terms except that the holder
*    is Tim Hudson (tjh@cryptsoft.com).
*
*    Copyright remains Eric Young's, and
*    as such any Copyright notices in the
*    code are not to be removed.
*    If this package is used in a product,
*    Eric Young should be given attribution
*    as the author of the parts of the library
*    used.
*    This can be in the form of a textual
*    message at program startup or in
*    documentation (online or textual)
*    provided with the package.
*
*    Redistribution and use in source and
*    binary forms, with or without
*    modification, are permitted provided
*    that the following conditions are met:
*    1. Redistributions of source code must
*       retain the copyright notice, this list of
*       conditions and the following
*       disclaimer.
*    2. Redistributions in binary form must
*       reproduce the above copyright
*       notice, this list of conditions and the
*       following disclaimer in the
*       documentation and/or other
*       materials provided with the
*       distribution.
*    3. All advertising materials mentioning
*       features or use of this software must
*       display the following
*       acknowledgement:
*       "This product includes
*       cryptographic software written by
*       Eric Young (eay@cryptsoft.com)"
*       The word 'cryptographic' can be left
*       out if the rouines from the library
*       being used are not cryptographic
*       related :-).
*    4. If you include any Windows specific
*       code (or a derivative thereof) from
*       the apps directory (application
*       code) you must include an
```

```
*       acknowledgement:
*       "This product includes software
*       written by Tim Hudson
*       (tjh@cryptsoft.com)"
*
*   THIS SOFTWARE IS PROVIDED BY
*   ERIC YOUNG ``AS IS" AND ANY
*   EXPRESS OR IMPLIED WARRANTIES,
*   INCLUDING, BUT NOT LIMITED TO,
*   THE IMPLIED WARRANTIES OF
*   MERCHANTABILITY AND FITNESS
*   FOR A PARTICULAR PURPOSE ARE
*   DISCLAIMED. IN NO EVENT SHALL
*   THE AUTHOR OR CONTRIBUTORS BE
*   LIABLE FOR ANY DIRECT, INDIRECT,
*   INCIDENTAL, SPECIAL, EXEMPLARY,
*   OR CONSEQUENTIAL DAMAGES
*   (INCLUDING, BUT NOT LIMITED TO,
*   PROCUREMENT OF SUBSTITUTE
*   GOODS OR SERVICES; LOSS OF USE,
*   DATA, OR PROFITS; OR BUSINESS
*   INTERRUPTION)
*   HOWEVER CAUSED AND ON ANY
*   THEORY OF LIABILITY, WHETHER IN
*   CONTRACT, STRICT LIABILITY, OR
*   TORT (INCLUDING NEGLIGENCE OR
*   OTHERWISE) ARISING IN ANY WAY
*   OUT OF THE USE OF THIS SOFTWARE,
*   EVEN IF ADVISED OF THE
*   POSSIBILITY OF SUCH DAMAGE.
*
*   The licence and distribution terms for
*   any publically available version or
*   derivative of this code cannot be
*   changed. i.e. this code cannot simply
*   be copied and put under another
*   distribution licence [including the GNU
*   Public Licence.]
*   /
```

## About JQuery,Sizzle.js

This product uses the following software, released under MIT License.

jQuery JavaScript Library v1.7.2
http://jquery.com/
Copyright 2011, John Resig

Sizzle.js
http://sizzlejs.com/
Copyright 2011, The Dojo Foundation
Date: Wed Mar 21 12:46:34 2012 -0700

MIT License

Permission is hereby granted, free of charge, to any person obtaining a copy of this software and associated documentation files (the "Software"), to deal in the Software without restriction, including without limitation the rights to use, copy, modify, merge, publish, distribute, sublicense, and/or sell copies of the Software, and to permit persons to whom the Software is furnished to do so, subject to the following conditions:

The above copyright notice and this permission notice shall be included in all copies or substantial portions of the Software.

THE SOFTWARE IS PROVIDED "AS IS", WITHOUT WARRANTY OF ANY KIND, EXPRESS OR IMPLIED, INCLUDING BUT NOT LIMITED TO THE WARRANTIES OF MERCHANTABILITY, FITNESS FOR A PARTICULAR PURPOSE AND NONINFRINGEMENT. IN NO EVENT SHALL THE AUTHORS OR COPYRIGHT HOLDERS BE LIABLE FOR ANY CLAIM, DAMAGES OR OTHER LIABILITY, WHETHER IN AN ACTION OF CONTRACT, TORT OR OTHERWISE, ARISING FROM, OUT OF OR IN CONNECTION WITH THE SOFTWARE OR THE USE OR OTHER DEALINGS IN THE SOFTWARE.

# Specifications

## General

**Mass**

Approx. 2.2 kg (4 lb 14 oz) (Body only)

**PMW-300K1**

Approx. 3.9 kg (8 lb 9.6 oz) (With lens, lens hood, viewfinder, BP-U30 battery, SxS memory card)

**PMW-300K2**

Approx. 4.4 kg (9 lb 11 oz) (With lens, lens mount adapter, lens hood, viewfinder, BP-U30 battery, SxS memory card)

**Dimensions**

**PMW-300K1**

Approx. W275 mm × H239 mm × D384 mm
(10 $^{7}/_{8}$ × 9 $^{1}/_{2}$ × 15 $^{1}/_{8}$ inches) (With lens, lens hood, and view finder. Not including extruding parts.)

**PMW-300K2**

Approx. W279 mm × H239 mm × D424 mm
(11 × 9 $^{1}/_{2}$ × 16 $^{3}/_{4}$ inches) (With lens, lens mount adapter, lens hood, and view finder. Not including extruding parts.)

**Power Requirements**

DC IN: 12 V
Battery: 11 V to 17 V

**Power Consumption**

Approx. 20 W (while recording, with viewfinder, I/O Select: Off)
Approx. 23.5 W (while recording, with viewfinder, with RM-B170, I/O Select: HD SDI & HD HDMI)

**Operating Temperature**

0°C to 40°C (32°F to 104°F)

**Storage Temperature**

–20°C to +60°C (–4°F to +140°F)

**Battery Operating Time**

Approx. 1.2 hours with BP-U30 battery (while recording, with viewfinder, I/O Select: Off)
Approx. 2.4 hours with BP-U60/BP-U60T battery (while recording, with viewfinder, I/O Select: Off)
Approx. 3.6 hours with BP-U90 battery (while recording, with viewfinder, I/O Select: Off)

**Recording Format (Video)**

**XAVC**

XAVC-I mode: CBG, 112 Mbps max., MPEG-4 AVC/H.264

**MPEG-2 Long GOP**

HD422 mode: CBR, 50 Mbps max., MPEG-2 422P@HL
HQ mode: VBR, 35 Mbps max., MPEG-2 MP@HL
SP mode: CBR, 25 Mbps, MPEG-2 MP@H-14
SD mode: MPEG IMX, DVCAM

**Recording Format (Audio)**

**exFAT**

XAVC-I mode: LPCM 24-bit, 48 kHz, 4 channels

**UDF**

HD422 mode: LPCM 24-bit, 48 kHz, 4 channels
HQ mode: LPCM 16-bit, 48 kHz, 4 channels
SD MPEG IMX mode: LPCM 16/24-bit, 48 kHz, 4 channels
SD DVCAM mode: LPCM 16-bit, 48 kHz, 4 channels

**FAT**

HQ mode: LPCM 16-bit, 48 kHz, 4 channels
SD mode: LPCM 16-bit, 48 kHz, 2 channels

## Recording Frame Rate

**exFAT**

XAVC-I mode: CBG, 112 Mbps max., MPEG-4 AVC/H.264
- 1920 × 1080/59.94i, 50i, 29.97p, 25p, 23.98p
- 1280 × 720/59.94p, 50p

**UDF**

HD422 50 mode: MPEG-2 422P@HL, 50 Mbps / CBR
- 1920 × 1080/59.94i, 50i, 29.97p, 25p, 23.98p
- 1280 × 720/59.94p, 50p, 29.97p, 25p, 23.98p

HD 420 HQ mode: MPEG-2 MP@HL, 35 Mbps / VBR
- 1920 × 1080/59.94i, 50i, 29.97p, 25p, 23.98p
- 1440 × 1080/59.94i, 50i, 29.97p, 25p, 23.98p
- 1280 × 720/59.94p, 50p, 23.98p

SD MPEG IMX mode
- 720 × 486/59.94i, 29.97PsF
- 720 × 576/50i, 25PsF

SD DVCAM mode
- 720 × 486/59.94i, 29.97PsF
- 720 × 576/50i, 25PsF

**FAT**

HD HQ 1920 mode: MPEG-2 MP@HL, 35 Mbps / VBR
- 1920 × 1080/59.94i, 50i, 29.97p, 25p, 23.98p

HD HQ 1440 mode: MPEG-2 MP@HL, 35 Mbps / VBR
- 1440 × 1080/59.94i, 50i, 29.97p, 25p, 23.98p

HD HQ 1280 mode: MPEG-2 MP@HL, 35 Mbps / VBR
- 1280 × 720/59.94p, 50p, 29.97p, 25p, 23.98p

HD SP 1440 mode: MPEG-2 MP@H-14, 25 Mbps / CBR
- 1440 × 1080/59.94i, 50i, 23.98p (2-3 pull down)

SD DVCAM mode
- 720 × 480/59.94i, 29.97PsF
- 720 × 576/50i, 25PsF

## Recording/Playback Time

**exFAT**

XAVC-I mode
- When using SBP-128B (128 GB): Approx. 120 minutes
- When using SBP-64B / SBS-64G1A (64GB): Approx. 60 minutes
- When using SBS-32G1A (32GB): Approx. 30 minutes

**UDF**

HD422 mode

SD IMX50 mode
- When using SBP-128B (128 GB): Approx. 240 minutes
- When using SBP-64B / SBS-64G1A (64 GB): Approx. 120 minutes
- When using SBS-32G1A (32 GB): Approx. 60 minutes

HQ mode
- When using SBP-128B (128 GB): Approx. 360 minutes
- When using SBP-64B / SBS-64G1A (64 GB): Approx. 180 minutes
- When using SBS-32G1A (32 GB): Approx. 90 minutes

SD DVCAM mode
- When using SBP-128B (128 GB): Approx. 440 minutes
- When using SBP-64B / SBS-64G1A (64 GB): Approx. 220 minutes
- When using SBS-32G1A (32 GB): Approx. 110 minutes

**FAT**

HQ mode
- When using SBP-128B (128 GB): Approx. 400 minutes
- When using SBP-64B / SBS-64G1A (64GB): Approx. 200 minutes
- When using SBS-32G1A (32GB): Approx. 100 minutes

SP mode
- When using SBP-128B (128 GB): Approx. 560 minutes
- When using SBP-64B / SBS-64G1A (64GB): Approx. 280 minutes

When using SBS-32G1A (32GB):
Approx. 140 minutes

SD mode: DVCAM

When using SBP-128B (128 GB):
Approx. 520 minutes

When using SBP-64B / SBS-64G1A (64GB): Approx. 260 minutes

When using SBS-32G1A (32GB):
Approx. 130 minutes

**Note**

These approximate recording/playback times depend on operating conditions, available memory, etc.

## Supplied Lens

**Lens Mount**

**PMW-300K1**
Sony 1/2-inch type EX mount

**PMW-300K2**
Sony 1/2-type bayonet mount

**Zoom Ratio**

**PMW-300K1**
14×, servo/manual switchable

**PMW-300K2**
16×, servo/manual switchable

**Focal Length**

**PMW-300K1**
5.8 mm to 81.2 mm
(35 mm equivalent: 31.4 mm to 439 mm)

**PMW-300K2**
5.8 mm to 93 mm
(35 mm equivalent: 31.4 mm to 503 mm)

**Iris**

Auto/Manual selectable
F1.9 to F16 and C (close)

**Focus**

**PMW-300K1**
Auto/Manual selectable
Ranges:
800 mm to ∞ (Macro OFF)
50 mm to ∞ (Macro ON, Wide)
735 mm to ∞ (Macro ON, Tele)

**PMW-300K2**
Auto/Manual selectable
Ranges:
800 mm to ∞ (Macro OFF, Wide)
1500 mm to ∞ (Macro OFF, Tele)
50 mm to ∞ (Macro ON, Wide)
782 mm to ∞ (Macro ON, Tele)

**Image Stabilizer (PMW-300K1 only)**

ON/OFF selectable, shift-lens system

**Filter Diameter**

**PMW-300K1**
M77 mm, pitch 0.75 mm

**PMW-300K2**
M82 mm, pitch 0.75 mm

## Camera Section

**Image Device (Type)**

1/2-inch triple chip "Exmor" Full HD CMOS image sensor

**Effective Picture Elements**

1920 (H) × 1080 (V)

**Optical System**

F1.6 prism system

**Built-in Optical Filters**

OFF: Clear
1: 1/4ND
2: 1/16ND
3: 1/64ND

**Sensitivity (2000 lx, 89.9% reflectance)**

F11 (typical) (1920 × 1080/59.94i mode)

**Minimum Illumination**

0.12 lx (typical) (1920 × 1080/59.94i mode, F1.9, +18 dB gain, with 64-frame accumulation, Gamma off, 100% video level)

0.02 lx (typical) (1920 × 1080/59.94i mode, F1.9, +18 dB gain, with 64-frame accumulation, Gamma on, 50% video level)

**S/N Ratio**
60 dB (Y) (typical)

**Horizontal Resolution**
1,000 TV lines or more (1920 × 1080i mode)

**Shutter Speed**
1/32 ~ 1/2000 sec.

**Slow Shutter (SLS)**
2, 3, 4, 5, 6, 7, 8, 16, 32, 64 frames

**Slow & Quick Motion Function**
720p: 1 ~ 60 frames (1 ~ 50 frames for PAL Area, UDF)
1080p: 1 ~ 30 frames (1 ~ 25 frames for PAL Area, UDF)

**White Balance**
Preset mode (3200K), Memory A mode, Memory B mode/ATW mode

**Gain**
–3, 0, 3, 6, 9, 12, 18 dB, AGC

**Gamma Curve**
Selectable

## Inputs/Outputs

**Audio Input**
XLR type 3-pin (2), female, LINE/MIC/MIC+48V switchable
LINE: +4 dBu
MIC: -70 dBu to -30 dBu

**Video Output**
BNC type (1), HD-Y/composite signal
1.0 Vp-p, 75 Ω

**Audio Output**
RCA pin jack (CH-1, CH-2)

**SDI output**
BNC type (2), switchable with HD/SD SMPTE292M/259M

**i.LINK**
IEEE 1394, 4-pin connector (1), HDV (HDV 1080i) input/output, DV input/output, S400

**Timecode Input**
BNC type (1), switchable with TC OUT connector, SMPTE 12M-2-2008
0.5 V to 18 Vp-p, 10 kΩ

**Timecode Output**
BNC type (1), switchable with TC IN connector, SMPTE 12M-2-2008
1.0 Vp-p, 10 kΩ

**GENLOCK Input**
BNC type (1)
1.0 Vp-p, 75 Ω

**USB**
USB connector (type A) (1), USB connector (mini B) (1)

**Headphone Output**
Stereo minijack (1)
-18 dBu 16 Ω

**Speaker Output**
Monaural
Output: 150 mW

**DC Input**
DC jack

**Remote**
8-pin

**Lens Remote**
8-pin round (1)

**HDMI Output**
Type A (1)

## Monitoring

**Viewfinder**

3.5-inch color LCD monitor: 960 (H) × 3 (RGB) × 540 (V), 16:9

## Built-in Microphone

**Built-in Microphone**

Omnidirectional stereo electret condenser microphone

## Media

**Type**

ExpressCard/34 (2)

## Supplied Accessories

Lens (1)
Lens hood with the lens cap (PMW-300K1) (1) (pre-attached to the lens)
Lens hood (PMW-300K2) (1) (pre-attached to the lens)
Lens cap (PMW-300K2) (1)
Lens mount adapter (PMW-300K2) (1)
Viewfinder (1)
Cold shoe kit (1)
Infrared Remote Commander (1)
Battery charger (1)
Lithium-Ion Battery BP-U30 (1)
USB cable (1)
Shoulder strap (1)
Lithium battery (CR2032 for backup) (1)
This is pre-installed to the camcorder.
Lithium battery (CR2025 for the IR Remote Commander) (1)
This is pre-installed to the IR Remote Commander.
Before Using this Unit (1)
CD-ROM (Operating Instructions) (1)

## Software Downloads

When the unit is used with a PC connection, download device drivers, plug-ins, and application software, where applicable, from the Sony Professional products web site.

Sony Professional products web site homepage:

| | |
|---|---|
| U.S.A. | http://pro.sony.com |
| Canada | http://www.sonybiz.ca |
| Latin America | http://sonypro-latin.com |
| Europe, Middle East and Africa | http://www.pro.sony.eu |
| Japan | http://www.sonybsc.com |
| Asia Pacific | http://pro.sony-asia.com |
| Korea | http://bp.sony.co.kr |
| China | http://pro.sony.com.cn |

## Optional Accessories

Battery pack
BP-U30, BP-U60, BP-U60T, BP-U90
Battery charger/AC adaptor
BC-U1, BC-U2
SxS memory card
SxS PRO+ Series
SxS PRO Series
SxS-1 Series
SxS memory card USB reader/writer
SBAC-US20
Media Adaptor
QDA-EX1 (for XQD memory cards)
MEAD-SD02 (for SDHC cards)
Wireless adapter
CBK-WA100
USB wireless LAN module
IFU-WLM3
Electret condenser microphone
ECM-VG1, ECM-673, ECM-674, ECM-678, ECM-MS2, ECM-680S
Wireless microphone
UWP-V1*, UWP-V2*
Remote control unit
RM-B170

* To attach accessories to the rear accessory shoe, use the cold shoe kit (supplied).

Design and specifications are subject to change without notice.

## Dimensions

(in mm (inches))

**PMW-300K1**

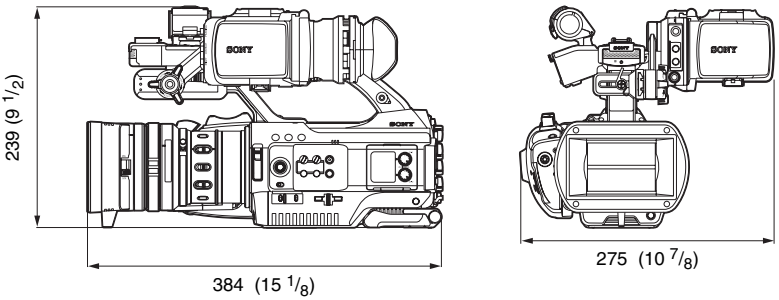


**PMW-300K2**

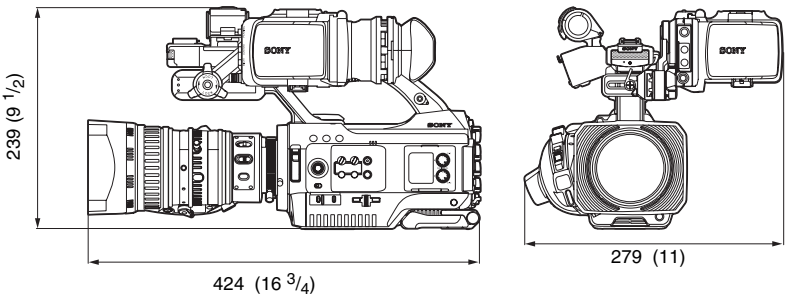

**Notes**

- Always make a test recording, and verify that it was recorded successfully.
  SONY WILL NOT BE LIABLE FOR DAMAGES OF ANY KIND INCLUDING, BUT NOT LIMITED TO, COMPENSATION OR REIMBURSEMENT ON ACCOUNT OF FAILURE OF THIS UNIT OR ITS RECORDING MEDIA, EXTERNAL STORAGE SYSTEMS OR ANY OTHER MEDIA OR STORAGE SYSTEMS TO RECORD CONTENT OF ANY TYPE.
- Always verify that the unit is operating properly before use. SONY WILL NOT BE LIABLE FOR DAMAGES OF ANY KIND INCLUDING, BUT NOT LIMITED TO, COMPENSATION OR REIMBURSEMENT ON ACCOUNT OF THE LOSS OF PRESENT OR PROSPECTIVE PROFITS DUE TO FAILURE OF THIS UNIT, EITHER DURING THE WARRANTY PERIOD OR AFTER EXPIRATION OF THE WARRANTY, OR FOR ANY OTHER REASON WHATSOEVER.
- SONY WILL NOT BE LIABLE FOR CLAIMS OF ANY KIND MADE BY USERS OF THIS UNIT OR MADE BY THIRD PARTIES.
- SONY WILL NOT BE LIABLE FOR THE LOSS, REPAIR, OR REPRODUCTION OF ANY DATA RECORDED ON THE INTERNAL STORAGE SYSTEM, RECORDING MEDIA, EXTERNAL STORAGE SYSTEMS OR ANY OTHER MEDIA OR STORAGE SYSTEMS.
- SONY WILL NOT BE LIABLE FOR THE TERMINATION OR DISCONTINUATION OF ANY SERVICES RELATED TO THIS UNIT THAT MAY RESULT DUE TO CIRCUMSTANCES OF ANY KIND.

# Index

## Numerics

23.98P Output 91

## A

AC Adaptor 18
AC Power 19
ACCESS lamps 31
AGC mode 43
All Reset 100
All-Clip thumbnail screen 66
Aperture 59
Area Detection 60
assignable buttons 49, 101
ATW 41
ATW Speed 86
Audio Input 88
AUDIO LEVEL knobs 47
audio monitoring 47
Audio Output 89
audio recording levels 47
AUDIO SELECT switches 47
AUDIO SET Menu 88
AUDIO Status 76
Auto FB Adjust 99
Auto Naming 39
Auto Shutter 43
Auto White Balance 42
Auto-Tracing White balance 41

## B

backup battery 131
Battery Alarm 102
Battery Charger 18
Battery INFO 102
Battery Pack 18
Battery/Media Status Screen 77
Black 60
Black Gamma 60
BRIGHT control 22
built-in speaker 68
built-in stereo microphones 46
Button/Remote Status Screen 76

## C

Camera Data 100
CAMERA SET Menu 81
CAMERA Status Screen 75
Charge Count 77
Clip 39, 67, 104, 110
Clip Cont. Rec 51, 83
Clip Name Disp 106
Clip name 39
Clip Operation menu 68
Clock 20
Clock Set 100
CMOS Image Sensors 122
Color Bars 82
Color Correction 56
Color Detection 60
CONTRAST control 22
Copy 60
Copy All 105
Country 102
Cueing up 68

## D

DC IN connector 19
DC IN Power 19
delete shot marks 74
Deleting Clips 61
Depth-of-Field indication 17
Detail 57
diopter compensation 22
Direct Menu 17, 102
DISP CLIP INFO 70
Display On/Off 94
DISPLAY switch 12
Down Converter 90
DURATION/TC/U-BIT button 46

## E

Electronic Shutter 43
Entering a character string 80
Error Indications 135
EX SLS 43
EXPAND (COARSE) 73
EXPAND (FINE) 73
EXPAND CLIP Screen 69, 72
EXPAND FOCUS button 44
ExpressCard slot 110

External Input Signals 113
External Monitors 109
External Synchronization 114
eyepiece 24
Eyepiece focusing knob 22

## F

F.Sys. 103
flange focal length 27
Flicker Reduce 46, 82
Flickers 45
Focus 44
Format 33, 103
Format Media 105
Frame Recording 50, 83
FULL AUTO button 38
Full Auto mode 38
Full MF mode 44

## G

Gain 42
Gain Setup 81
Gamma 59
Genlock 102
GENLOCK IN connector 114
Grip 29

## H

HD Detail 57
HD/SD 103
HDMI OUT connector 109
headphone connector 47
Histogram indication 17
Hours Meter 101

## I

i.LINK 16, 112
i.LINK connector 109
Image Alignment 53
Image Inversion 87
Information 98
Input Source Select 90
Interval Recording 49, 83
IR Remote 15, 29, 102
IRIS button 44

## J

Jog dial 79

## K

Knee 59
KP Flag 48

## L

Language 100
lens cap 38
Lens file(s)
- loading 130
- loading automatically 131
- saving 130
- setting data 130

lens files 28
LENS Menu 98
lens mount adapter 26
lens mount lever 25
LENS REMOTE connector 44
Limitations of Inputs/Outputs 128
Low Key SAT 60

## M

Macro mode 45
MACRO switch 45
Marker 42, 92
Matrix 55
MEAD-SD02 33
Media Adaptor 33
Media Full 32
Media Near Full 32
Memory A mode 41
Memory B mode 41
MENU button 79
Menu Scroll 108
MF Assist 82
microphone holder 46
MIRROR switch 23
Monitoring audio 47
Multi Matrix 56

## N

Network 106
NG Flag 48
Nonlinear Editing 113

## O

OK Flag 48
OK Mark 48
OK-Clip thumbnail screen 66
One-Push Auto Iris 44
On-handle ZOOM button 44
Operation 98
OTHERS Menu 100
Output Signal 123

## P

P.Cache Rec 83
PAUSE 73, 74
Peaking 45, 92
PEAKING control 45
Picture Cache Recording 51
Picture Profiles 54
Plan.Metadata 63, 105
Planning metadata 62
PLAY/PAUSE button 67
Power Zoom 44
PP Data 60
Preset mode 41
Preventing switching errors 39
Profile Name 55

## R

REC HOLD lever 39
Rec Review 49, 86
REC REVIEW button 39
REC START/STOP button 39
Recording audio signals 46
recording start mark 51, 69
Reference Tone 48
RELEASE button 29
Reset 60

## S

S&Q Motion 84, 117
SBAC-US20 110
SD Detail 58
SDHC Cards 33
SDI OUT connector 109
SDI Rec Control 91, 109
SDI/HDMI/i.LINK I/O Select 90
SEL/SET buttons 79
SEL/SET dial 79
Setting 99
Setting Data 61
Setup Menus 78, 81
Shockless White 86
SHOT MARK 48, 69
SHOT MARK Screen 69, 73
shot marks 48, 68, 74
Shutter 81
Skin Tone Detail 58
SLOT SELECT button 66
Slow & Quick Motion 52
SLS/EX SLS 81
Sony 1/2-inch type EX mount lens 26
Status Screens 75
Steady Shot 45
SxS Device Driver Software 110
SxS Memory Cards 30
System 102

## T

Tally 101
TC Format 97
TC IN connector 115
TC Out 116
TC OUT connector 116
TC/UB SET Menu 96
THUMBNAIL button 66
Thumbnail Screens 65, 68
time and date 20
Time Data 46
Time Zone 20, 100
Timecode 46, 96, 114
TLCS 17, 38, 86
Trigger Mode 102, 112

## U

USB cable 110
USB Flash Drives 34
Users Bit 46, 96
UTC 20

## V

Version 108
Version Up 108
VF 92
VF SET Menu 92
Video Formats 40

VIDEO OUT connector 109
VIDEO SET Menu 90
Video Status Screen 76
Viewfinder 20
VOLUME buttons 47, 68

## W

Warning Indications 135
White 57
WHITE BAL switch 41
White Balance 41
White Switch <B> 86
WHT BAL button 42
Wide Conversion 87
Wi-Fi 107
Wi-Fi remote commander 36

## X

XQD Memory Cards 33

## Z

Zebra 42, 93
ZEBRA button 42
zebra pattern 42
Zoom 44, 82
Zoom Speed 44, 82
Zoom Transition 83

http://www.sony.net/